ULTRAPYC

TRUE VOLUME AND DENSITY ANALYZER

Operating Manual

Models: UPY-32, UPY-32T, MUPY-32, MUPY-32T, UPY-32F, UPY-32FT
Version: 5.*xx*

Original Instructions (English)
I15IB010EN-B

A brand of **Anton Paar**
1900 Corporate Drive
Boynton Beach FL 33426,
USA

CONTACT INFORMATION

Quantachrome Instruments

A brand of **Anton Paar**

1900 Corporate Drive

Boynton Beach, Florida, 33426

USA

Tel: 1-561-731-4999

E-mail:

support-sp@anton-paar.com

www.quantachrome.com

ULTRAPYC

CALIBRATION DATA

Table A-1, Calibration Sphere Data

Calibration Sphere	Volume (cm^3)
Large	56.5592
Medium	28.9583
Small	7.0699
Micro (optional)	1.0725
Nano (optional)	0.0898

Three sizes of sample cells are supplied with the instrument (they are referred to as large, medium, and small in this manual). Three optional sizes are also available and referred to as micro, meso, and nano. The table below shows the size, nominal volume, and part number for each sample cell.

Table A-2, Sample Cell Nominal Sizes

Sample Cell Size	Nominal Volume (cm^3)	Part Number
Large	131.7	04000-0414-1
Medium	48.1	04000-3314-1
Small	10.8	04000-3319-1
Micro (optional)	4.5	04000-3320-1
Meso (optional)	1.8	04000-5418-1
Nano (optional)	0.25	04000-3707-M-1

Model Number_____

Serial Number_____

MICRO-ULTRAPYC

CALIBRATION DATA

Table A-3, Micro Calibration Sphere Data

Calibration Sphere	Volume (cm^3)
Micro	1.0725
Nano	0.0898

The three sample holders supplied with the instrument are referred to as "large, medium and small" in this manual. These are comparative sizes only. The table shows the actual size, nominal volume, and part number for each sample holder.

Table A-4, Micro Sample Cell Nominal Sizes

Relative Size	Actual Size	Nominal Volume (cm^3)	Part Number
Large	Microcell	4.5	04000-3320-1
Medium	Mesocell	1.8	04000-5418
Small	Nanocell*	0.25	04000-3707-M

Model Number _____

Serial Number _____

* See Appendix 5 for recommended usage.

TABLE OF CONTENTS

PREFACE

This is the operating manual for the Ultrapyc–*e* family of pycnometers, which include the Ultrapycnometer 1000e, Ultrapyc 1200e, Micro-Ultrapycnometer 1000e, and Micro-Ultrapyc 1200e instruments as well as Ultrapycs with Foam Mode. The Ultrapyc and Micro-Ultrapyc instruments use the same principle theory and operational procedures, hence, the generic term "Ultrapyc" will be used throughout this manual. The Ultrapyc instruments with Foam Mode have an extended Menu (Ultra-Foam Menu). In cases where the instructions differ, a specific reference to the individual instrument will be clearly indicated.

A. INTRODUCTION

PYCNOMETRY is derived from the Greek word *pyknos*, which has long been identified with volume measurements. The pycnometers from Quantachrome are specifically designed to measure the true volume of solid materials by employing Archimedes' principle of fluid (gas) displacement and the technique of gas expansion (Boyle's law). Ideally, a gas is used as the displacing fluid since it penetrates the finest pores assuring maximum accuracy. For this reason, helium is recommended since its small atomic dimensions assure penetration into crevices and pores approaching 0.2 nm in diameter. Its behavior as an ideal gas is also desirable. Other gases such as nitrogen can be used, often with no measurable difference. The use of nitrogen or SF_6 is indicated when helium is able to penetrate the solid structure (such as in low-density polymers and material of vegetable origin).

NOTE! Always consult the Material Safety Data Sheet (MSDS) for the gas being used and the sample being analyzed.

The Quantachrome Ultrapyc are the ultimate instruments for measuring the true volume and density of powders, foams, and bulk solids. A wide range of sample cell sizes are easily interchanged to accommodate many different samples. Calibration, sample conditioning, operation of valves and calculation of results are completely automatic. Samples are quickly and automatically analyzed as many times as necessary to achieve the user-desired percent deviation from mean at the specified number of runs. Should the deviation setting be too narrow, the analysis terminates upon reaching an operator specified maximum number of runs. The results are printed automatically, freeing the operator to perform other laboratory tasks. For laboratories with lower analytical throughput needs, the single sample station Ultrapyc 1200*e* provides ease of operation and high performance. It can be loaded, purged, and automatically analyzed in sequence with no operator involvement. Adjustable flow rates provide maximum flexibility of operation.

For measurement of foams, a specialized UltraFoam version is available. This is a system for automatic measurement of open and closed cell content with automatic functions for the analysis of cell compressibility and cell fracture according to ASTM D-6226.

For measurements of extremely small amounts of material, the Micro-Ultrapyc provides three interchangeable cell sizes of 4.5 cm^3, 1.8 cm^3 and 0.25 cm^3.

For measurements that require a fixed, known temperature, a temperature control option is available for the Ultrapyc.

GENERAL APPLICATIONS include research, development, and quality control in diverse industries related to: carbon blacks, catalysts, cement, ceramics, charcoals, cosmetics, desiccants, fertilizers, fibers, fillers, insulating and structural foams, powdered foods, ion exchange resins, minerals such as alumina, silica, titania and others, nuclear fuels, petrochemicals, pharmaceuticals, and powdered metals. Pycnometry can even determine the percentage of solids in a slurry.

1 Summary of Ultrapyc 1200e/Ultrafoam Features

- **Automatic Functions** — Operating simplicity is achieved *via* PC and a standard web browser or *via* built-in keypad following prompts or instructions which are automatically presented on the alphanumeric display. Measurements and reporting of results are totally automatic. Continuous self-diagnostics monitor and signal fault conditions that may arise. The transducer is automatically reset to zero prior to each run. Front panel LEDs display the operational status at all times.
- **Sample Identification** — In the analysis parameters, alphanumeric sample ID's may be added to uniquely identify the sample.
- **Temperature Readout** — Sample temperature is displayed and printed to ±0.1 °C. This feature is important for: (a) verifying operation at the calibration point, or (b) making corrections when analyzing larger quantities of materials whose density varies significantly with temperature.
- **Target Pressure** - The measurement of pressure-deformable cellular foams (insulation) is made possible by this feature. A user can conveniently reduce the target pressure typically from around 18 psi to 2 psi. The ULTRAFOAM version uses optimum low pressure and performs calculations of open and closed cell content with or without ASTM correction for cut cells.
- **Sample Purge** - Before analysis, samples are automatically conditioned to remove contaminants and trapped air. The user has a choice to purge by a continuous flow or, by a pulse mode suitable for powders. In addition, The Ultrapyc 1200e has capability to purge the sample by vacuum for a "user selectable" time (vacuum pump supplied separately).
- **Repeat Run Mode** - This feature eliminates the need to reenter the same set of analysis parameters prior to each run. It allows one to quickly change sample weight and sample ID, or simply to re-run a sample by a double keystroke. Greater simplicity and ease of operation are afforded when connected to a PC.
- **Useful Statistics** - For three or more averaged measurements, the % coefficient of variance and the standard deviation of the volume and the density are reported. This allows a relative comparison of samples from run-to-run and a precise assessment of the absolute variation of the sample being measured.
- **NIST Traceability** - Pycnometer volume calibration spheres can be provided with a formal Report of Calibration from the National Institute of Standards and Technology.
- **PC Connectivity** - Ultrapyc 1200*e* features USB connections to a PC and communication via a standard web browser. Analysis can be started and monitored from the PC, even remotely on a network. Reports can be accessed for analysis on the PC, or can be stored on an external USB flash / thumb drive.
- **Balance Port** - Permits interface with configurable analytical balance for automatic transfer of sample weight. Eliminates risk of transcription error.

2 Technical Specifications

ULTRAPYC 1200*e* INSTRUMENT

PHYSICAL†

Height:.....22.7 cm (8.9 in)
Width: .....31.1 cm (12.25 in)
Depth:.....54.0 cm (21.25 in)
Weight:.....9.75 kg (21.5 lbs.)

ELECTRICAL

Voltage:.....100 - 240 VAC (see nameplate on rear of unit)
Frequency:.....50/60 Hz
Power (max):.....150 W
Connection:.....Grounded, single-phase outlet

ENVIRONMENTAL

Operating Temperature:.....10 °C – 38 °C
Max. Relative Humidity: .....90 % (non-condensing)

OPERATION

Fully automated, easy access to instrument's Menus from a front panel Keypad or PC using PYCWEB computer interface; allows user to set-up, collect, display and archive data.

GAS

Ultrahigh purity compressed gas regulated to a pressure of 20 psig (He is recommended; N_2 or SF_6 are suitable alternatives for helium permeable materials). Any other non-corrosive dry gas may be used for special applications.

PURGE MODES

Continuous flow for solids, pulse mode for powders or evacuation (optional vacuum pump is required).

FLOW RATES

User selectable with precision needle valve(s).

PRECISION

Digital pressure display resolution of 0.0001 pounds per square inch (psi).

CALIBRATION

Stainless-steel sphere standards; NIST traceable values optional. Each instrument supplied with a full set of spheres housed in protective, padded wooden box.

OUTPUTS

RS232 serial port for balance interface; two USB port(s) for printer and portable flash drive storage, RJ45 Ethernet port for network/LAN internet connection to PC.

PERFORMANCE

Based on clean, dry, thermally equilibrated samples and filled sample cell:

Table A-1, Accuracy and Repeatability Using ULTRAPYC or ULTRAFOAM units.

Cell Size	Accuracy	Repeatability
135 cm^3	< ± 0.02%	< ± 0.01%
50 cm^3	< ± 0.02%	< ± 0.01%
10 cm^3	< ± 0.03%	< ± 0.015%
4.5 cm^3	< ± 0.35%	< ± 0.175%
1.8 cm^3	< ± 2%	< ± 1%
0.25 cm^3	< ± 4%	< ± 2%

Table A-2, Accuracy and Repeateability Using MICRO-ULTRAPYC unit

Cell Size	Accuracy	Repeatability
4.5 cm^3	< ± 0.1%	< ± 0.05%
1.8 cm^3	< ± 0.30%	< ± 0.15%
0.25 cm^3	< ± 1.0%	< ± 0.50%

OPTIONS

Temperature control (requires external bath/circulator, not included).

OPTIONAL ACCESSORIES

Gas regulator assembly (P/N 01207), bath/circulator (P/N 02126-1), HP printer (P/N 38093 or P/N 38093-1).

B. SAFETY

1 Symbols Used in this Manual

CAUTION! This sign denotes a hazard that could result in damage to the instrument.

WARNING! This sign denotes a hazard that could result in injury to the operator.

NOTE! This sign denotes an important detail.

TOOLS REQUIRED: This signifies that tools are required for the described action.

2 Safety Instructions for the Ultrapyc

- This instrument has been designed for laboratory use only.
- The Ultrapyc requires a trained operator to use the instrument.
- This instrument must not be used for any application other than that for which it was designed.
- Operate this instrument only at the voltage specified on the nameplate on the rear of the instrument.
- Operator must be aware of hazards associated with the sample under test.‡
- Operator must be aware of hazards associated with the gas(es) used.‡
- This instrument must be disconnected from the mains for any cleaning, maintenance or service.
- Do not make any unauthorized modifications to this instrument.
- When attaching a plug to the power cord, be sure to follow the color code shown below:

Brown = live, blue = neutral, green/yellow = earth ground.

‡ Always consult the Material Safety Data Sheet (MSDS) for the gas being used and the sample to be analyzed!

C. INSTALLATION

1 Instrument Setup

1.1 Flow Diagram

Shown on the next page is a flow diagram of the Ultrapyc. A simplified flow diagram can also be displayed by accessing the manual mode of the PycWeb computer interface.

CAUTION! Familiarize yourself with the instrument's Flow Diagram before proceeding with Operation and/or accessing the Manual Mode.

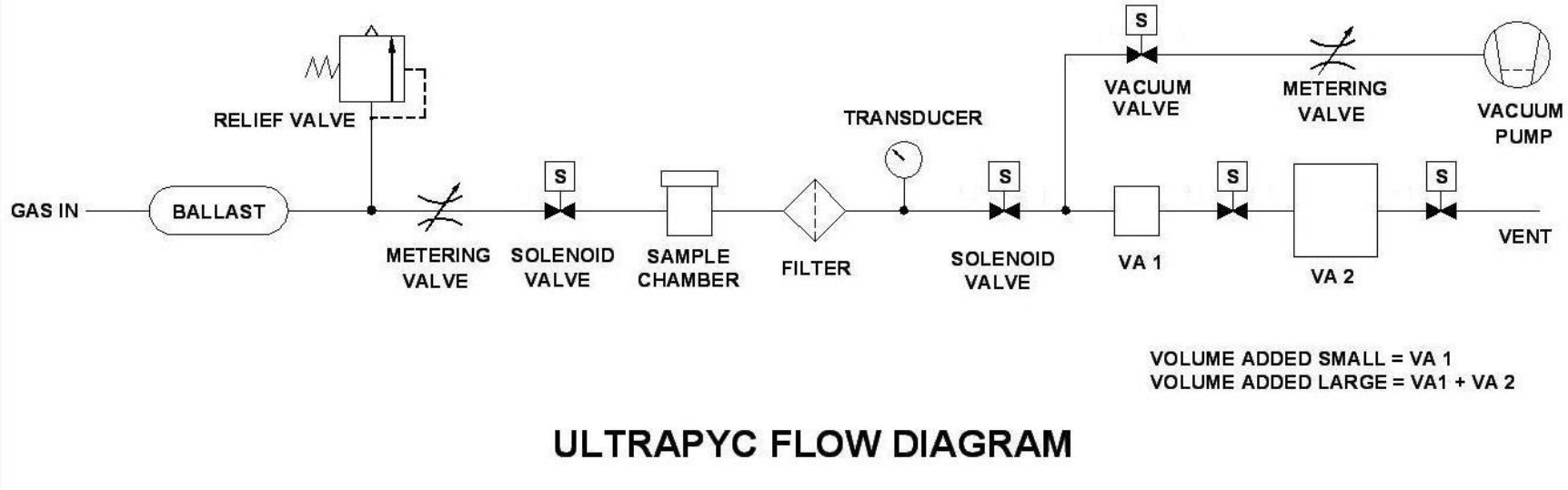

Figure C.1, Schematic diagram of Ultrapyc family of Pycnometers.

1.2 Start Up and Shutdown

The Ultrapyc runs the Linux operating system (OS.) When power is applied to the unit and the power switch is turned on, it takes one full minute to boot the operating system and launch the Ultrapyc control programs. During the one minute boot up time the only indication that the unit is ON will be the yellow colored backlight of the LCD display screen. Be patient; don't cycle the power switch. Allow the pycnometer time to boot fully before beginning operation. Once the Ultrapyc control program begins running, text messages will be displayed on the LCD screen and the green LEDs will light up. When the LEDs light the Ultrapyc is ready for use.

Like most modern operating systems, the Linux operating system could be damaged if the unit is not shut down properly. The Ultrapyc main menu selection "`8 – Shutdown`" is used to initiate a graceful shutdown of the Ultrapyc control programs and the Linux operating system. Always call the main menu option "`8 – Shutdown`," and wait for 1 minute before turning off the power switch.

1.3 Environment

Do not operate this instrument under a heat or air conditioning duct, near open windows, or in direct sunlight. The Ultrapyc should be maintained in an environment with a temperature that is as constant as possible. This is most effectively achieved by connecting an optional circulating bath (P/N 02126-1) to the instrument (provided that the unit has optional circulator bath connections installed).When the instrument is first turned ON, it should not be operated until thermal equilibration has been reached.

Allow sufficient space to the left and to the right of the instrument for optional accessories such as a printer, balance, PC, and a bath circulator. Position the instrument for easy access the on/off switch if necessary.

1.4 Gas Tank Connections

TOOLS REQUIRED: 7/16" wrench (not supplied).

Attach a dual stage regulator with stainless steel diaphragm to the nitrogen or helium gas tank. Connect the regulator to the bulkhead fitting on the rear of the cabinet using the 1/8" copper tubing and nut & ferrule set supplied. It may be necessary to obtain an adapter in order to connect the tubing to the regulator. A suitable regulator assembly (P/N 01207) complete with shut-off valve, CGA580 cylinder fitting and 1/8" outlet fitting is available from Quantachrome. Adjust the tank pressure regulator to slightly above 20 psig (140 kPa). Pressures above 25 psig can damage the Ultrapyc pressure transducer. Check for leaks at the fitting using a soap solution.

It is important to properly establish the inlet gas pressure at the instrument and to check that the instrument is leak-free. Use Manual Mode (see Section D.5) to determine the gas input pressure at the instrument. Do not rely on the gas tank regulator for an accurate assessment of the pressure.

CAUTION! Before proceeding, familiarize yourself with the instrument's Manual Mode (see Section D.5 for a description of valve operation).

Follow the steps below after connecting the gas tank to the instrument:

1. Set the tank pressure to 0 psig by fully unwinding the regulator spindle.
2. Go into Manual Mode and bleed the gas input line down by opening the input, expansion, Va Large, and vent valves (refer to Figure F.2 in Section F).
3. The input gas pressure should be 1.5–2 psi above the desired target pressure, Pa. For example, if the desired target pressure for the measurement is 18 psig, zero the transducer and slowly build pressure into the closed cell chamber by closing the expansion valve and slowly increasing the tank pressure (refer to Figure F.6 in Section F) to a maximum of 19.5–20 psig.
4. Once the target input pressure (Pa + 1.5–2 psi) has been established, the rate of pressurization in the sample cell must also be set. Close the gas input valve and open the expansion valve (the vent valve is already open from the previous step) to vent the system to ambient pressure. Zero the transducer. When the transducer is reading approximately zero, close the expansion valve. Open the Storage Compartment and locate the Gas Flow Control needle valve (refer to Section C.2). A small flat-head screwdriver (not supplied) will be necessary to adjust the needle valve. Open the gas input valve and monitor the rate at which the sample chamber is pressurized. Adjust the needle valve such that Pa is achieved in 30-60 seconds or at a rate of no more than 0.1 psi per "update" by the time Pa is reached.

NOTE! The rate of pressurization in the sample chamber should be checked each time, when a different size sample cell is selected for an analysis. Small sample cells will pressurize more quickly than a large or medium size cell.

Test the instrument for leaks following the instructions in the Appendix 8 "Leak Check."

1.5 Sample Cell Holder and Sample Cells

The cylinder located in the front panel is the **calibration/analysis chamber (**also referred to as **sample cell holder)**. The **sample cell** is a stainless steel cup, which slides into the sample cell holder. The large sample cell fits tightly into the sample cell holder. However, when the medium or small sample cell is used, an appropriate aluminum sleeve (also referred to as **adapter sleeve**) is first inserted inside the sample cell holder. Sample cell will slowly settle into the cell holder (or proper cell adapter - if used) in order to avoid spilling powder when inserted. To remove the sample cell, rotate the black plastic cover on top of the sample cell holder counterclockwise. The cell can then be lifted out using a lift out tool P/N 75184 inserted into one of the small holes/grooves near the top. When using the large sample cell, be sure that the horizontal slits near the top of the cell line up with the vertical groove machined into the cell holder. This ensures that the gas has a free path into and out of the cell.

Three sample cells are supplied with the **Ultrapycnometer 1000*e* and Ultrapyc 1200*e***. Their nominal capacities (volumes) are approximately 135, 50, and 10 cm^3 (see Ultrapyc Calibration Data Table on page 3). Additionally, optional 4.5 (micro), 1.8 (meso), and 0.25 (nano) cm^3 cells

are available. However, the use of the smaller cells will result in a small loss in accuracy. The micro, meso, and nano cells are used with their respective adapter sleeves.

Three sample cells are supplied with the **Micro-Ultrapycnometer 1000*e* and Micro-Ultrapyc 1200*e***. These have nominal volumes of 4.5, 1.8 and 0.25 cm^3 (see Micro-Ultrapyc Calibration Data in Table A-3 on page 4).

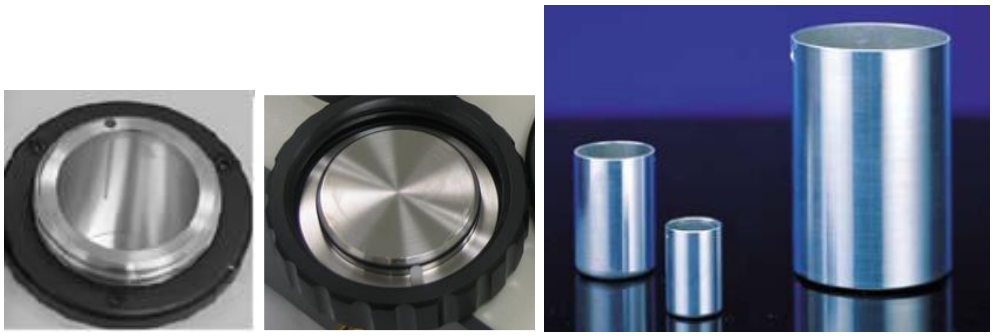

Figure C.2, (from left to right) Ultrapyc's Sample Cell Holder, Cover, and Sample Cells

Lift out tool P/N 75184

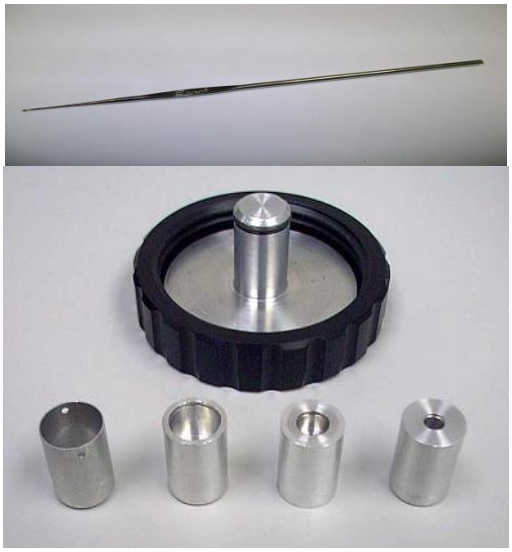

Figure C.3, Micro-Ultrapyc's Adapter Sleeves, Cells and Cover

Prior to density measurement, the sample cell should be weighed, filled with sample (optimally to at least ¾ of the cell volume), and re-weighed. The sample weight is then determined by weight difference. For maximum accuracy, a final weighing should be done after completing the analysis if the samples are to be decontaminated.

NOTE! If fine powders are being tested, the sample may be elutriated during the analysis. To prevent this from occurring, optional non-elutriating sample holders and covers with fine holes are available.

1.6 Sample Cell Holder Cover

In order to insure reproducible cell volumes:

1. When sealing the sample cell inside the calibration/analysis chamber (i.e. inside the sample cell holder), make certain that the O-ring is secured in the groove machined into the inside of the sample cell holder cover. A light film of vacuum grease on the O-ring is essential to insure a good seal and make it easier to insert the cover on the cell station. Replacement O-Rings are sold in pairs (P/N 51000-032).

NOTE! Use Vacuum Grease P/N 91000-.25 to lubricate the O-ring, Never use petroleum jelly as this will degrade it.

2. Align the fiduciary mark on the cover with the mark on the cabinet. Then rotate the black delrin ring clockwise on the threads of the cell holder until it turns no further (metal-to-metal contact is made; the black delrin cover will rotate around the inner sealing plug. A locating pin, on the bottom side of the cell cover, mates to a groove on the face of the cell holder. The O-ring makes a radial seal on the inside of the cell holder.
3. The mating surfaces of the top of the cell and the underside of the cover *must* be kept clean in order to insure that they always seal the same way.

NOTE! When not in use, the sample cell holder/ chamber should be kept tightly sealed to prevent contamination by ambient moisture and to maintain the thermal equilibrium of the system.

1.7 Calibration Spheres

Four calibration spheres are supplied with the **Ultrapycnometer 1000*e* and Ultrapyc 1200*e***; 1 large (56.5592 cc), 1 medium (28.9583 cc), and 2 small (7.0699 cc each). Two calibration spheres are supplied with the **Micro-Ultrapycnometer 1000*e* and Micro-Ultrapyc 1200*e***; 1.0725 cc each. The calibration spheres are used when recalibrating V_A and V_C. When not in use the calibration spheres should be stored in the built-in storage compartment. When handling the spheres, gloves or paper towels should be used to prevent transfer of oils and heat to the spheres. When placing the calibration sphere in the large cell, the cell should be turned on its side and the sphere rolled into it to prevent deforming the cell.

Care must be taken to protect the spheres from damage since this could change their volumes and might lead to inaccurate calibrations.

Ultrapyc: When recalibrating V_A, three spheres together (1 large and 2 small, total combined volume = 70.699 cc) are used for the large V_A. One small sphere is used for the small V_A.

Micro-Ultrapyc: When recalibrating V_A, both spheres are used for the large V_A. One sphere is used for the small V_A.

Figure C.4, NIST Traceable Calibration Spheres

Calibration spheres are provided in the shipping kit for calibration of the instrument (for nominal volumes and Part Numbers, refer to Calibration Data Sheet for Ultrapyc and Micro-Ultrapyc on pages 3 and 4).

1.8 Pressure Relief Valve

A 25 pound per square inch (175 kPa) pressure relief valve is located immediately after the gas input fitting. Tank regulator pressure settings over 25 psig (175 kPa) will activate the valve and gas will vent. This valve prevents damage to the pressure transducer by over-pressurization. Regulators should be set at slightly over the target pressure but never over 22 psig (150 kPa).

If the relief valve is actuated, the gas input to the instrument should be turned off and vented momentarily to allow the valve to reset.

1.9 Solenoid Valve

If the Ultrapyc is used with fine powders for an extended period of time, it may be necessary to clean the seats of the valves. These are accessible by removing either the left or right side of the instrument. The vent valve is more easily accessible from the left side, whereas the rest of the valves can be accessed from the right side.

WARNING! Before proceeding, be sure the power is disconnected and the gas flow is turned off.

To remove the side panels remove all the screws from the side and pull the panel away from the instrument. For the left side panel, the four screws holding the connector panel to the side panel need to be removed as well.

Disconnect the two electrical leads to the valve to be cleaned. Open the valve by turning the knurled ring. Clean the valve seat, disk, O-ring, and plunger using dry compressed air.

CAUTION! Do not use solvents to clean the valve, since this can cause vapors to be introduced into the instrument.

When the valve has been cleaned, reassemble and reattach the leads.

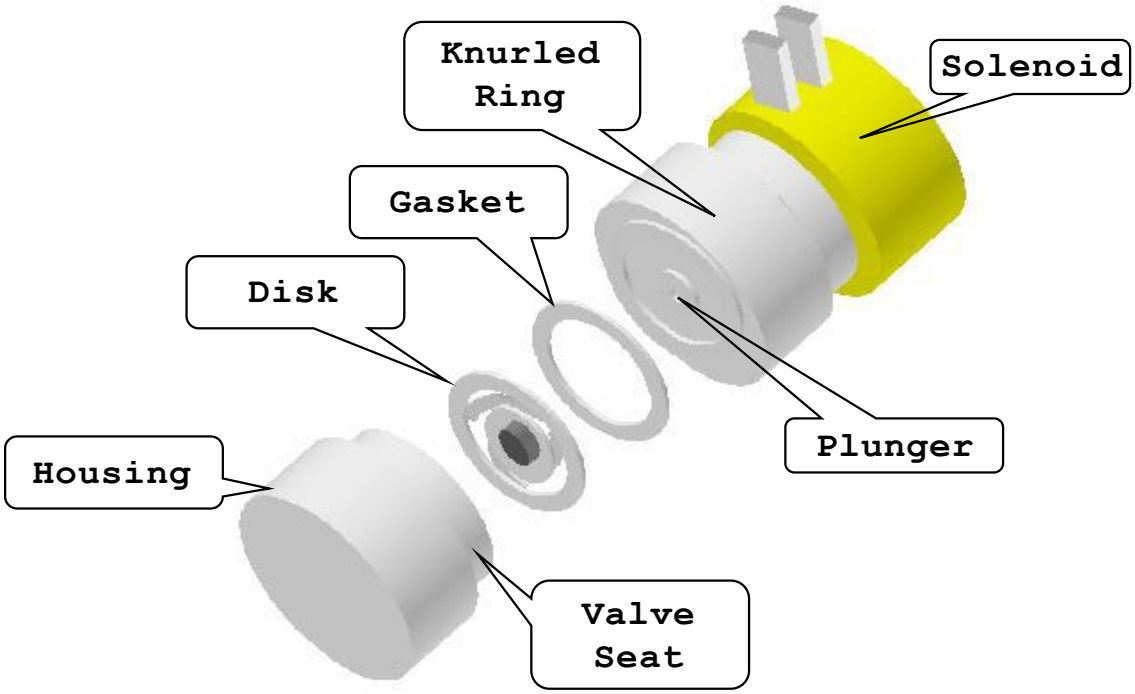

Figure C.5, Exploded View Of Valve

1.10 Vacuum Pump (Optional)

The Ultrapyc can be used with a vacuum pump for sample preparation by evacuation as an alternative to purging with a flow of dry inert gas.

The vacuum pump should be capable of an ultimate vacuum equal to or better than 50 millitorr (6.7 Pa). A suitable 2-stage, rotary oil pump is available from Quantachrome (see Table C-1 in Section C.1.11). Be sure to select according to operating voltage.

Connect the pump using 3/4" internal diameter reinforced vacuum hose and NW16 fittings (see figure below). The correct accessories are available from Quantachrome (see Table C-1 in Section C.1.11). The vacuum connection is located at the rear of the unit.

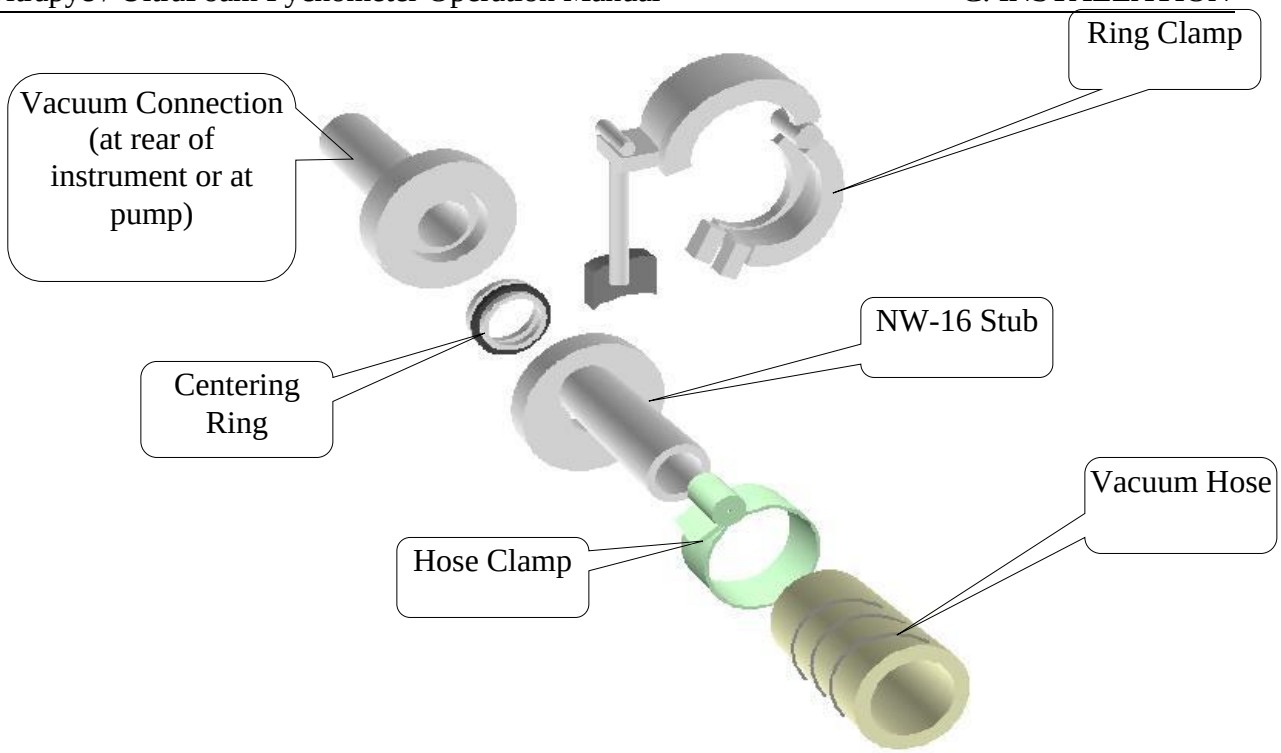

1.11 Vacuum Accessories (Optional)

Table C-1, Part numbers for vacuum accessories.

ITEM	QTY REQUIRED	P/N
Pump (105-115)	1	46030
Pump (200-220)	1	46031
Hose clamp	2	71018
NW-16 Stub	2	44019
Ring Clamp	2	44030
Vacuum Pump Oil (1 liter)	1	91019
Hose 3/4 in. I.D.	5 feet	46025
Centering Ring (UPYC)	1	44028
Centering Ring (pump)	1	44028-2

2 Instrument Controls

The Ultrapyc's panel components and operating controls are shown below:

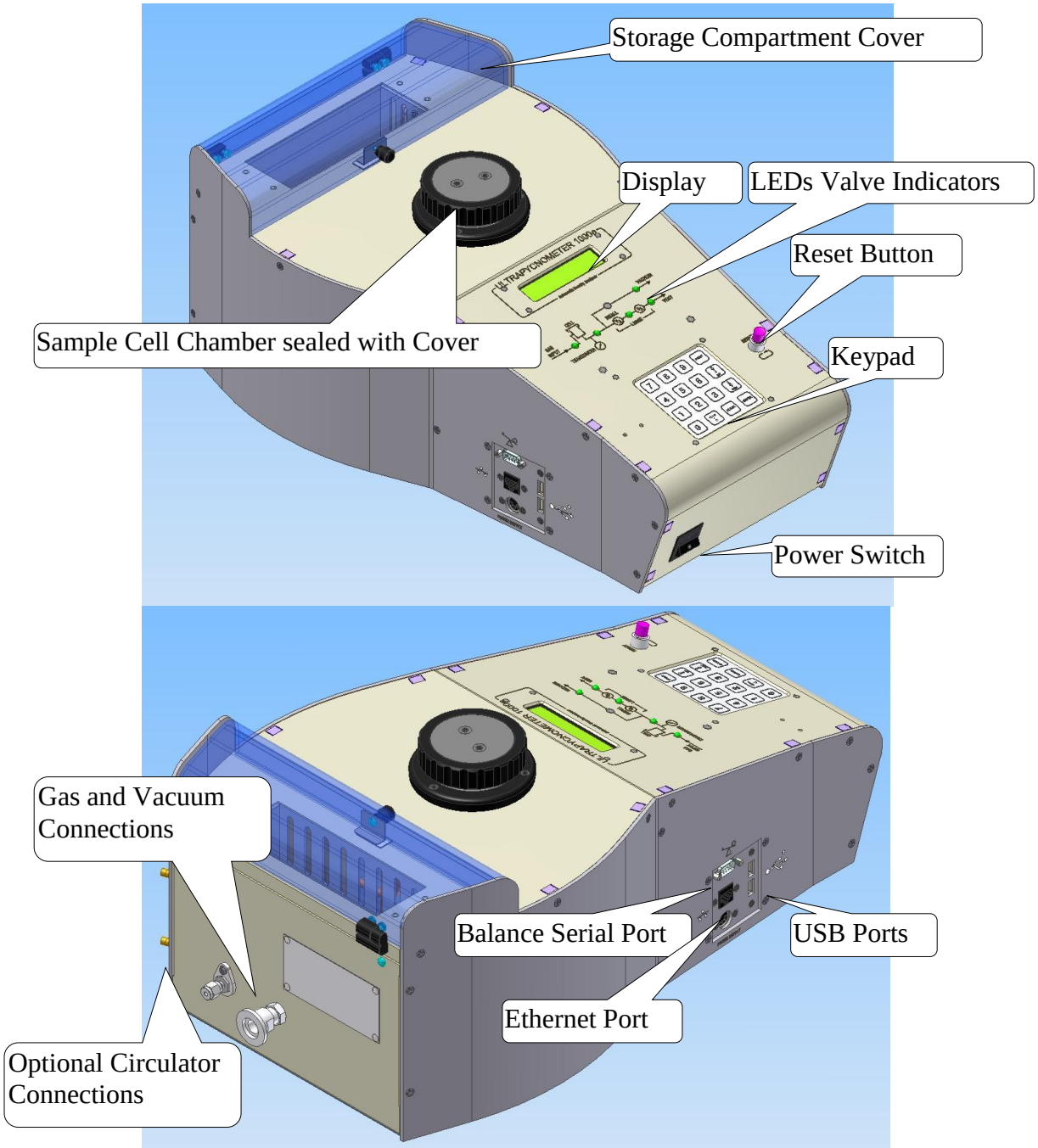

Figure C.6, Ultrapyc Controls And Connections

2.1 Power Input

The **Power Input** (the female-5-pin circular jack) is mounted to the left side panel of the Ultrapyc. To connect, plug-in the male-5-pin-circular connector of the universal AC power adaptor (supplied).

2.2 Power Switch

The **Power Switch** (rocker switch) is located on the right side panel of the Ultrapyc. Press **|** to switch ON and O to switch OFF.

NOTE! The power switch should *not* be used to abort a run in progress (use Reset Button instead).

2.3 Reset Button

The Reset Button (momentary push button) is located to the right of the keypad. This "push button" is used to abort calibration or sample measurement runs, and to exit from manual mode.

2.4 Valve Indicator LEDs

Five Valve Indicator LEDs - located on the front panel below the alphanumeric display, provide positive indication of Ultrapyc operational status. A LED will be lit (green) when the corresponding solenoid valve is open, whereas "unlit" LED indicates a closed valve.

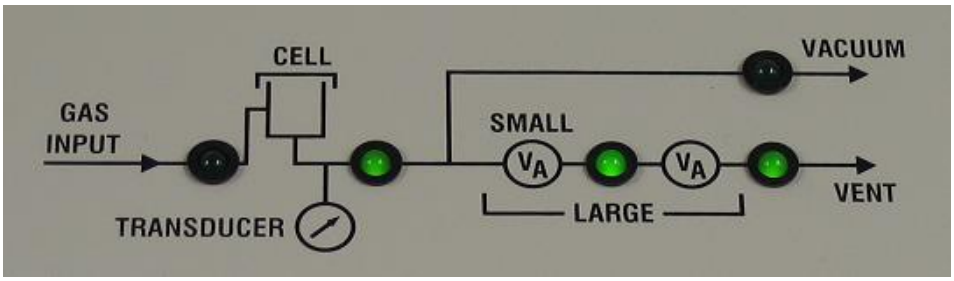

Figure C.7, Valve Indicator LEDs.

2.5 Alphanumeric Display

Alphanumeric Display is located near the top of front panel. This 2-line, 20-character display is used for displaying menus and results.

2.6 Keypad

Keypad is located on front panel. It consists of 16 keys used for entry, editing and scrolling of operator-entered values, data, and results.

2.7 Flow Control Valve

Flow Control Valve is located inside the storage compartment (at the bottom wall on the right side). This needle valve allows varying the flow rate of gas into and through the sample chamber. To decrease or increase the flow/pressurization rate, use a screwdriver to turn the valve clockwise or counterclockwise, respectively. The flow control valve should be set so as to reach the target pressure (pressure A) in approximately one minute.

NOTE! Small cells pressurize more quickly when used with the proper adapter sleeve, than medium and large cells. Cell containing larger sample quantities pressurize more quickly than the same size cells containing lesser sample amounts.

2.8 Evacuation Rate Regulator Valve

Evacuation Rate Regulator Valve is located inside the storage compartment (at the bottom wall on the left side). This needle valve allows varying the evacuation rate of the sample chamber. To decrease or increase evacuation rate, use a screwdriver to turn the valve clockwise or counterclockwise, respectively. The Evacuation Rate Regulator Valve is factory set at position "2 turns open." For vacuum evacuation (optional), it is required that a vacuum pump is connected to the Pycnometer.

NOTE! Do not set the evacuation rate beyond the factory setting (2 turns open) during measurements of powders.

2.9 Serial Port (Balance Interface)

A 9-pin RS-232 serial port is located at the left side panel of the instrument. This port is used to connect the Pycnometer to a Balance.

2.10 Ethernet Port

The RJ45 Ethernet jack – IEEE 802.3u 100 Base-T Ethernet port is located on the left side panel of the Ultrapyc. The instrument can be hooked up to a typical Ethernet LAN using a standard shielded Ethernet cable (not supplied) or directly to a computer workstation's network port using the Ethernet crossover cable (supplied). See Section D.3.3.1 and D.4.2 for details on setting up the network connections and Section H for details on operating the instrument from a PC.

2.11 USB Ports

The Ultrapyc has two USB ports (located on the left side panel) available for connecting a USB printer or a USB flash memory storage device.

NOTE! A compatible HP printer can be purchased directly from Quantachrome (P/N 38093), see Appendix 4.

NOTE! Due to variation in hardware, certain USB memory drives might not work properly with the Ultrapyc. A compatible USB flash memory storage device was supplied with the Ultrapyc.

2.12 Storage Compartment

The Storage Compartment is located at the top of Ultrapyc (near rear-end). It can be used for storage of accessories (it also contains the Flow Control and Evacuation Rate Control Valves). To access storage compartment, lift up the blue cover using a mounted handle.

2.13 Calibration/Analysis Chamber

Calibration/Analysis Chamber (Cell Holder) is located on the front panel of Ultrapyc (between the Display and Storage Compartment). This chamber accommodates Sample Cells and appropriate Sleeve Adapters (for medium and small cells), and it is sealed with the Cover.

2.14 Circulator Bath Connections (Optional)

The Ultrapyc can be optionally supplied with the circulator Bath Connections. Use of a circulator is beneficial for temperature control (stability) during calibration and/or analysis runs.

D. ULTRAPYC OPERATION

1 Introduction

For the greatest accuracy, allow a minimum of one hour for warm-up and thermal equilibration. The optional circulating bath accessory may be used to provide constant temperature conditions (see Section C.1.3). The Ultrapyc should be left powered-ON indefinitely if the instrument is used daily. When in use, adiabatic expansions and compressions of the gas will cause the temperature of the cell and added volume to vary slightly. After three runs, a steady state condition will be achieved. Since analyses statistics are based on the data associated with three or more consecutive runs, the user should request a minimum of six runs for the most accurate results. This condition will be observed when the volumes of the calibration spheres are measured since they are made of steel with poor thermal conductivity and minimum contact area. This is particularly true when using the large cell with its larger gas volume. Powdered samples, with higher surface areas than the steel spheres and high heat capacities, may not encounter this phenomenon thereby allowing data to be obtained on the first run.

The following information pertains to all modes of operation:

1. During entry of numeric data using the keypad, the **CLEAR** key may be used to clear an error in the entry, which is noticed before **ENTER** is pressed.
2. The **RESET** button can be used at any time to abort a run or cancel entries and return the user to the main window.
3. The medium, small, and micro sample holders are always used with their respective adapter sleeves (**Ultrapycnometer 1000*e* and Ultrapycnometer 1200*e***).
4. During a run, the Ultrapyc will display the pressure values used in the calculations. The pressure value displayed is always the pressure above ambient (in psig). "PRESS A" is used to denote the pressure in the sample cell alone (i.e. with valve to V_A closed, V_A out). "PRESS B" is used to denote the pressure on the combined volume of $V_C + V_A$ (V_A in).

For example, if the display shows:

```
Vc #1 in Progress
Press B: 10.3421
```

This indicates the value of the pressure in the combined cell and added volume (V_A "in") during the first run of a cell volume calibration.

When multiple runs are performed during calibration procedures or sample analysis, the percent deviation of a given measurement is evaluated and compared with the level of deviation requested or prescribed for that measurement. This deviation for a quantity x is defined as follows:

$$\%Deviation = \frac{\frac{1}{n}\sum_{i=1}^{n}\left|x_i - \bar{x}\right|}{\bar{x}} 100\% \qquad \textbf{(D.1)}$$

where n is the number of runs and $\bar{x}$ is the mean value of x.

2 Navigation Through Ultrapyc Menus

When the Ultrapyc starts up the option messages associated with its Main Menu are displayed on its 2-line by 20-character LCD-display. The options of the Main menu are displayed in sequence:

`1-Run,`

`2-Calibrate,`

`3-System Settings,`

`4-User ID,`

`5-Print Last Run,`

`6-Change Languages,`

`7-Manual Mode,`

`8-Shutdown; and`

`9-Choose Instrument` (option 9 is displayed only on Ultrapyc/UltraFoam capable units).

Choose an option by selecting the corresponding numeric key on the Ultrapyc keypad. Some of the choices lead to sub menus other choices are used to initiate an action or set an Ultrapyc parameter. For example choosing "`1-Run`" from the Main Menu navigates the user to the Run submenu, whereas choosing Main Menu option "`8-Shutdown`" causes the instrument to shut down its operating system. A diagram of the Ultrapyc main menu, sub menus and parameters is shown below.

If your pycnometer has an UltraFoam capability, you can chose between operation in Ultrapyc or UltraFoam mode, by following the sequence:

Main Menu → `9- choose instrument`

to operate in Ultrapyc mode, Press 1-Ultrapyc,

or

to operate in UltraFoam mode 2-Ultrafoam (see section E for UltraFoam operation).

2.1 Ultrapyc Menu Map

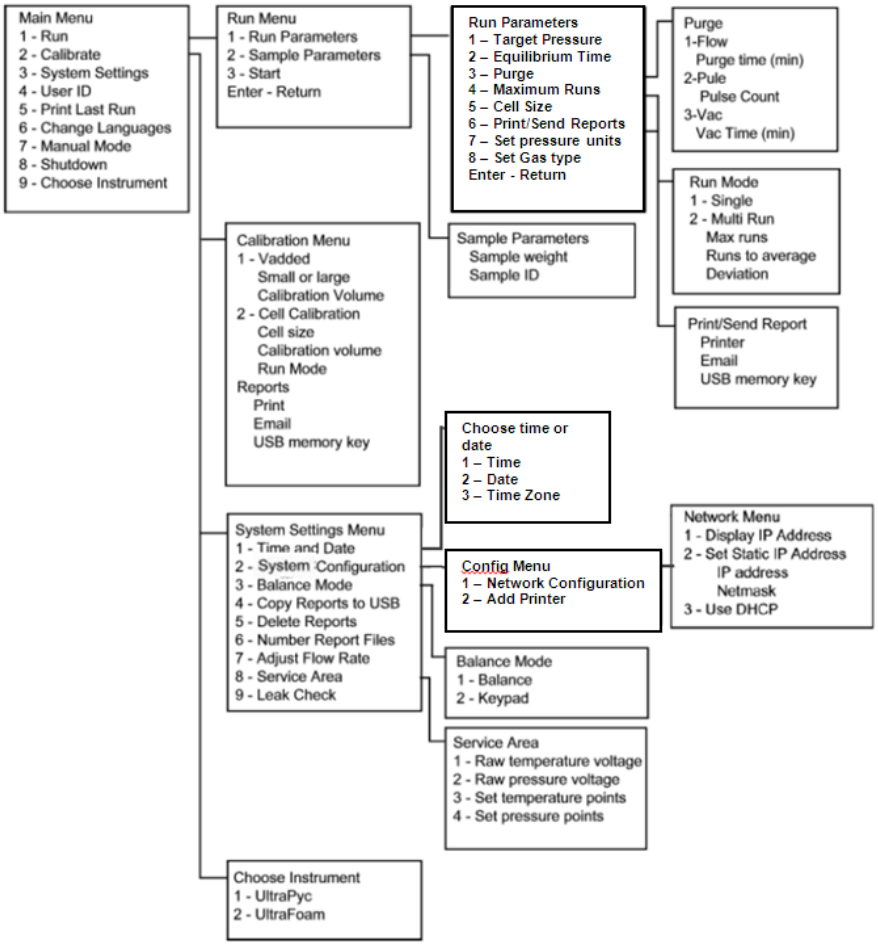

3 Main Menu

1 – Run. Enter the Run submenu.

2 – Calibrate. Enter the Calibration submenu.

3 – System Setting. Enter the System setting submenu.

4 – User ID. Set a User ID string of up to 16 characters that will be used in the report printouts.

5 – Print Last Run. Print a report from the last run.

6 – Change Languages. This option allows the user to change the language of the displayed messages and reports.

7 – Manual Mode. Enter manual mode. (Push reset to exit manual mode.)

8 – Shutdown. The Ultrapyc application program runs on top of the Linux operating system (OS.) The Linux OS is used for report printing, network communications, and file storage. Like most modern operating systems, it is important to shut down the Linux OS properly. Always select "`8-Shutdown`" and wait at least 1 minute for the OS to close down, before turning off the Ultrapyc power switch.

9 – Choose Instrument. If available, allows switching between Ultrapyc and UltraFoam operation

3.1 Run Menu

The Run-Parameters Menu is selected by sequence:

Main Menu → `1 - Run`

1 – Run Parameters. Enter the "Run Parameters" submenu.

2 – Sample parameters. Enter the "Sample Parameters" submenu.

3 – Start. Selecting 3-Start will start the sample volume measurement run. All parameters should be set before initiating a run.

ENTER – Return. Press **ENTER, CLEAR,** or **RESET** to return to the Main menu.

3.1.1 Run Parameters Menu

The Run-Parameters Menu is selected by sequence:

Main Menu → `1 - Run` → `1 - Run Parameters`

1 – Target Pressure. Set the target pressure.

2 – Equilibrium Time. Set the amount of time to wait for the pressure to stabilize.

3 – Purge. Set the purge mode and either the purge time or number of pulses.

4 – Run Mode. Select a Single or Multi-run. The Multi-run requires setting the maximum number of runs, number of runs to average and run deviation to use in the sample volume measurement cycle.

5 – Cell Size. Set the cell size 1 for large, 2 for medium, 3 for small.

6 – Print/Send Reports. Report files are always saved on the Ultrapyc file system. Select this menu option to determine how report files generated from the run will be distributed. Files can be printed to a USB printer, copied to a USB flash memory device, and/or emailed to the user.

NOTE! A compatible HP printer can be purchased directly from Quantachrome (P/N 38093), see Appendix 4.

NOTE! Due to variation in hardware, certain USB memory drives might not work properly with the Ultrapyc. A compatible USB flash memory storage device was supplied with the Pycnometer.

7 - Set pressure units. The pressure units displayed during a run and written in report files can be altered. The two choices are pounds per square inch gage (psig) and kilopascals (kPa.).

8 - Set Gas type. This option is used to set a gas name (up to 16 characters.) The gas name will be written into the report files.

ENTER – RETURN. Press the **ENTER** key, **CLEAR** key, or **RESET** button to return to the "Run Menu."

See the Section D.7.1, Set Run Parameters for a more detailed explanation on setting Run Parameters.

3.1.1.1 Purge Mode

The Purge Mode Routine is selected by sequence:

Main Menu → `1-Run` → `1-Run Parameters` → `3-Purge`

The Purge Mode routine allows the user to select the purge mode: `1-Flow`, `2-Pulse`, or `3-Vac`.

If Flow or Vac modes are chosen then purge time is set. If Pulse mode is selected, the number of pulses will be set.

3.1.1.2 Run Mode

The Run Mode Routine is selected by sequence:

Main Menu → `1-Run` → `1-Run Parameters` → `4-Run Mode`

The Run Mode routine allows the user to select the number of runs to use when performing a measurement:

1 – Single. The Ultrapyc will perform one run.

2 – Multi Run. Multiple run mode. If this option is selected the user is prompted for the maximum number of runs, number of runs to average together and the desired deviation. In multi-run mode, the Ultrapyc will repeat the measurement runs until the desired deviation is achieved. It the deviation

is not achieved the measurement cycles will continue until the maximum number of runs occurs.

3.1.2 Sample Parameters Menu

The Sample-Parameters Routine is selected by sequence:

Main Menu → `1 - Run` → `2 - Sample Parameters`

The Sample Parameter routine is called to set the sample weight and sample ID.

Sample weight: The sample weight can be entered using the keypad or could come from a Digital Balance attached to the Ultrapyc serial port. The source for the sample weight is selected by the "Balance Mode" option using the navigation sequence Main Menu → `3-System Settings` → `3-Balance Mode`. More details can be found in Section D.3.3.2, Balance Mode Routine, and Section D.7.2, Set the Sample Parameters.

Sample ID: Enter the sample ID (up to 16 characters in length.) The sample ID will be appended to the report file name for easier report tracking. Letters are entered using the **UP** and **REV** keys to scroll forward or backward though the alphabet. Press **ENTER** to accept the displayed letter, press **ENTER** a second time to accept the displayed sample ID.

3.2 Calibration Menu

The Calibration Routine is selected by sequence:

Main Menu → `2 - Calibrate`

The Calibration Menu guides the user through a series of questions that result in either an added volume calibration or a cell volume calibration.

1 – Vadded. Start a calibration of the "Added Volume." The user will be asked to choose the V-added size (large or small) and enter the volume of the calibration spheres used.

2 – Vcell. Start a calibration of the sample cell. The user will be asked to choose the cell size (large, medium or small), the volume of the calibration spheres used, the maximum number of runs, and the desired deviation.

3.3 System Settings Menu

The System Settings Menu is selected by sequence:

Main Menu → `3-System Settings`

1 – Time & Date. Enter the correct date and time and time zone.

2 – System Configuration. Enter the System Configuration Menu. The system configuration menu has items for configuring the network(via network sub-menu) and adding a printer.

3 – Balance Mode. Enter the "Balance Mode" submenu. The Balance Mode submenu allows the user to select whether sample weight is received from a digital scale attached to the Ultrapyc serial port or entered manually from the keypad

4 – Copy Reports to USB. This choice initiates a routine to copy report files stored on the Ultrapyc file system to a USB flash memory device inserted into one of the Ultrapyc's USB ports. The Ultrapyc is running the Linux operating system. Most USB flash memory devices (also called memory keys or memory sticks) are formatted for use on the Microsoft Windows operating system. For compatibility reasons, when the Ultrapyc copies report files to USB flash memory devices the report file names are shortened to 8 characters plus the .txt or .pdf extension. See Section D.8, Result Reports, in this manual for an explanation of how the file names are shortened. Both the .txt and the .pdf files will be copied.

NOTE! Due to variation in hardware, certain USB memory drives might not work properly with the Ultrapyc. A compatible USB flash memory storage device was supplied with the Pycnometer.

5 – Delete Reports. The Ultrapyc has a limited amount of space to store report files. Choose this option to delete *all* old report files of the specified type. The user has the option to delete run-reports, calibration-reports or both types. Both the .txt and the .pdf versions will be deleted.

6 – Number Report Files. Vadded calibration reports are named vaReport.txt and vaReport.pdf; cell calibration reports are named vcReport.txt and vcReport.pdf. Run reports are named ultraReportSAMPLE_ID.txt and ultraReportSAMPLE_ID.pdf where SAMPLE_ID is the sample ID that the user enters as a sample parameter. If a user repeats a run, the older report may be overwritten by a new report. If a user selects "`6 – Number Report Files`" then report files generated by the Ultrapyc will have a number appended to the name.

For instance, if this option is set, the cell calibration reports resulting from repeated cell calibrations will be vcReport.txt(.pdf), vcReport-1.txt(.pdf), vcReport-2.txt(.pdf), and so on.

Run reports will have numbers appended at the end of the sample ID (ultraReportSAMPLE_ID.txt(.pdf), ultraReportSAMPLE_ID-1.txt(.pdf), …). The user can turn off this option if they do not want to enumerate the report file name.

7 – Adjust Flow Rate. Call a routine to open up the gas input valve and build pressure in the Ultrapyc sample cell. The pressure and change in pressure are displayed. This routine can be helpful when adjusting the flow rate though the input pressure needle valve.

8 – Service Area. The service area is a password-protected area reserved for use by service technicians.

9 – Leak Check. Call the automated routine to check for leaks. See Appendix 8 for details on the operation of the leak check command.

3.3.1 Network Menu

The Network Menu is selected by sequence:

Main Menu → `3-System Settings` → `2-System Configuration`→`1-Network Configuration`

The Ultrapyc has a web based network interface called PycWeb. PycWeb runs on any modern web browser. PycWeb can be used to access report files, view runtime data, and control the Ultrapyc from a remote computer. The user needs to set the internet protocol (IP) address of the Ultrapyc, before PycWeb can be used. An IP address is a unique address that devices use for identification and communication on a computer network. See Section D.4.2 for details on network configuration.

1 - Display IP Address. When option 1 is selected, the Ultrapyc's IP address and Network mask are displayed.

2 - Set Static IP Address. Selecting this option allows the user to set the Ultrapyc static IP address and network mask. IP addresses on a Local Area Network (LAN) must be unique. Static IP addresses and network masks are usually allocated by the LAN network administrator.

3 - Use DHCP. IP addresses do not have to be static. It is very common for network devices to query a DHCP server on the LAN and obtain an IP address dynamically. If use DHCP is selected, the Ultrapyc will search the LAN for a DHCP server and obtain an IP address. The user can call option "`1 - Display IP Address`" to find the IP address assigned to the Ultrapyc by the DHCP server.

3.3.2 Adding a Printer

The add printer menu item is reached by the sequence:

Main Menu → `3-System Settings` → `3-System Configuration`→ `2-Add Printer`

The USB printer should be connected powered on and have paper loaded before this item is chosen. If the printer is successfully added a test page will be printed(see appendix 4 for more details about compatible printers).

3.3.3 Time Zone Selection

Main Menu → `3-System Settings` → `1-Time & Date`→ `3-Time Zone`

The time zone id is chosen from the list given in J. Appendix 11.

3.3.4 Balance Mode Menu

The Balance Mode Routine is selected by sequence:

Main Menu → `3-System Settings` → `3-Balance Mode`

The Balance Mode menu is used to select how the sample weight is entered into the Ultrapyc. There are two choices `1-Balance` or `2-Keypad`. If the sample weight will be entered manually using the Ultrapyc keypad, choose `2-keypad`. If a digital balance (scale) will be connected to the Ultrapyc serial port, select `1-Balance`. The Ultrapyc serial port setting must match the serial port setting of the digital balance. If `1-Balance` is selected the Ultrapyc will prompt the user to enter the serial port settings which include baud rate, number of stop bits, number of data bits and parity. The Ultrapyc will also ask for a serial port timeout, the timeout is the length of time in seconds that the Ultrapyc will wait for input from the digital balance. A 60-second timeout is typical.

4 Initial Software Setup

Most of the Ultrapyc initial setup is done in the System Setting Menu. Navigate to the System Settings submenu with sequence Main Menu → `3 - System Settings`.

4.1 Time and Date

Main Menu → `3 - System Settings` → `1-Time and Date`

Choose `1-Time and Date`**,** then `1-Time` and set the time. Use a 24-hour clock, set two digits for the hour followed by two digits for minutes and two digits for seconds. For example if its 2:30 PM set the clock to 14:30:00. Always use 6 digits to set the time. For example if the time is 9:03:00 AM, enter the six keys strokes 0, 9, 0, 3, 0 and 0. Press the **ENTER** key when the time is set. Press the **CLEAR** key to clear the time field.

```
Enter time: HHMMSS
     09:03:00
```

Choose `2-Date` to set the date. Always use 8 digits to set the date, the first 2 digits represent the month followed by two digits for the day of the month and lastly four digits for the year. For example if the date is March 27, 2008, enter the eight keys strokes 0, 3, 2, 7, 2, 0, 0, and 8. Pressing the **CLEAR** key will clear the date field. Press the **ENTER** key when the time is set. If the correct date is displayed at the start simply press the **ENTER** key to accept the current date.

```
Format MM-DD-YYYY
    3-27-2008
```

4.2 Network Configuration

4.2.1 Connecting the Ultrapyc to a LAN

The Ultrapyc has a web based network interface called PycWeb. PycWeb runs on any modern web browser. PycWeb can be used to access report files, view runtime data and can also be used

to control the Ultrapyc from a remote computer. In order to use PycWeb the Ultrapyc network port needs to be connected to the computers network.

Most offices and laboratories employ computer networks called local area networks (LANs). The Ultrapyc has a 100 Base-T Ethernet port and can easily be hooked up to a LAN.

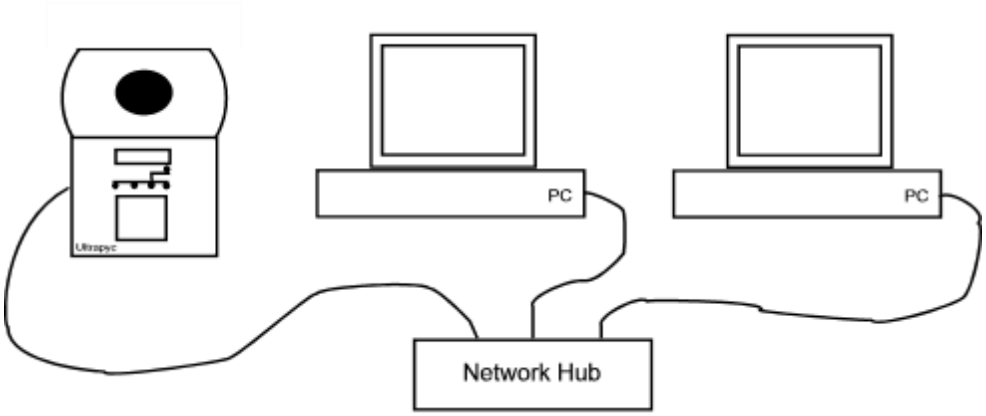

Figure D.1, Connecting Pycnometer To A Network

Attach the Ultrapyc to the LAN using a standard Ethernet patch cable (not included).

Once the Ultrapyc network cable is attached, the user needs to set up the Ultrapyc network parameters.

The user needs to set the internet protocol (IP) address of the Ultrapyc. An IP address is a unique address that devices use for identification and communication on a computer network. A network parameter called the "network mask" also needs to be set. A typical IP address might be 192.168.0.3 where 192.168.0 denotes a private network subnet and the .3 means that it is the third network device on that subnet. A corresponding network mask would be 255.255.255.0.

There are two common ways of obtaining an IP address. On some computer networks the IP addresses are allocated statically (as the term static implies, these IPs do not change,); static IPs are usually determined by the network administrator. The network administrator also determines the appropriate network mask. The second common method of obtaining an IP address is called DHCP. When DHCP is in use, devices (like the Ultrapyc) will search the LAN for a DHCP server and obtain an IP address and network mask from the DHCP server dynamically. If DHCP is used the Ultrapyc IP address is leased from the DHCP server and may change over time. The Ultrapyc will go through the DHCP process each time it is rebooted and once again, the IP address assigned to it may change. Use the `1-Display IP Address` option of the network menu to see the Ultrapyc IP address.

The Network Menu is selected by sequence:

Main Menu → `3-System Settings` → `2-Network Configuration`

1 – Display IP Address. Display the Ultrapyc's IP address and Network mask. This is useful when DHCP is used.

2 – Set Static IP Address. Selecting this option allows the user to set the Ultrapyc static IP address and network mask. IP addresses on a Local Area Network (LAN) must be unique. If you know your unique IP address and network mask, enter them here using the keypad. Pressing the **CLEAR** key will clear the

display. Press the **ENTER** key when the IP address has been entered correctly.

```
Enter IP address
192.168.0.3
```

Enter the network mask.

```
Enter subnet mask
255.255.255.0
```

Pressing the **CLEAR** key will clear the display. Press the **ENTER** key when the network mask has been entered correctly.

3 - Use DHCP. If `3-Use DHCP` is selected the Ultrapyc DHCP client will attempt to find a DHCP server and obtain an IP address from it.

```
Starting DHCP
DHCP Started
```

If the IP address is successfully obtained, the Ultrapyc will display assigned IP address and network mask. If the Ultrapyc DHCP client cannot obtain an IP address from the network, the IP address will not be displayed.

```
Inet address
192.168.0.38
```

Choose menu option `1-Display IP Address` to see the IP address again. If an IP address could not be obtained the message “Address not valid” is displayed.

```
Address not valid
```

If a valid IP address cannot be obtained, double check that the network cables are installed correctly. If the problem persists, consult your network administrator.

4.2.2 Connecting the Ultrapyc Directly to a Computer

Some laboratories may not have a computer network. If no network is available, the Ultrapyc can be connected directly to a computer workstation's Ethernet port using the Ethernet crossover cable supplied with the Ultrapyc.

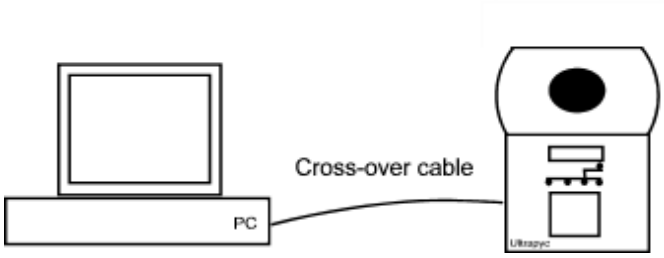

Figure D.2, Ultrapyc Connected Directly To A Pc Via A Crossover Cable

When making a direct connection you probably won't be using DHCP to get an IP address (unless the computer is running a DHCP service.) If the computer attached to the Ultrapyc is not part of a computer network then there is no harm changing its IP address. In this configuration both the IP address of the computer and the IP address of the Ultrapyc will need to be set. Navigate to the Ultrapyc Network Menu using sequence: Main Menu → `3-System Settings` → `2-Network Configuration`. Select `2--Set Static IP Address` and set the Ultrapyc IP address to 192.168.0.2 and set the network mask to 255.255.255.0. Set your computer workstation network IP address to 192.168.0.1 and network mask 255.255.255.0. See Appendix 6, Computer Network Address Configuration, for more details.

4.3 Balance Mode

Set the Balance Mode using key sequence:

Main Menu → `3-System Setting` → `3-Balance Mode`.

The Ultrapyc measures sample volume. The Ultrapyc operator must supply the sample weight so that sample density can be calculated. The balance mode settings determine how the weight of a sample will be entered into the Ultrapyc.

If balance mode `1-Balance` is chosen, the Ultrapyc will accept the weight from a digital balance connected to the Ultrapyc serial port.

If option `2-Keypad` is selected, the sample weight is entered by the operator using the keypad. When a digital balance is used, the Ultrapyc serial port setting must match the serial port setting of the digital balance. See Appendix 3, Balance Mode, for more details.

5 Manual Mode

The Ultrapyc can be operated manually for the purpose of troubleshooting and verifying the operation of the valves. The manual mode can be accessed from the Ultrapycs Main Menu by pressing "`7 - Manual Mode`."

CAUTION! While in the manual mode, it is possible to over-pressurize and damage the pressure transducer. *Do not allow the pressure to exceed 25 psig.*

When manual mode is entered, the display shows the pressure, the V_A in use and temperature.

```
Pressure = 1.61208
VA Large   25.1 °C
```

The following table shows the keys that operate each valve:

Table D-1, Keys Assigned To Valves In Manual Mode

KEY	VALVE / FUNCTION
0	Gas Input
"**.**" (decimal point)	V added
CLEAR	Small/Large V added
ENTER	Vent
REV	Vacuum
PRINT	Zero the transducer

The **CLEAR** key toggles between small and large V_A. Press the **RESET** Button to exit from the Manual Mode.

When entering "Manual Mode" the Ultrapyc measures ambient pressure then subtracts the ambient pressure from subsequent pressure readings so that the displayed pressure is gage-pressure. If the ambient pressure changes the display pressure may not be zero when vented. If the user wants to reset the transducer to zero the pressure reading, press the **PRINT** key.

When analyzing samples for the first time with a material with unknown vapor properties, use Manual Mode to ensure the pressure in the sample chamber is stable in the presence of sample.

- A decreasing pressure in the sample chamber indicates the analysis gas is penetrating the solid. This is normally only encountered with helium and polymer foams, low-density polymers, and vegetable matter. This can be confirmed after expanding into Va. The pressure will rise after the initial drop (helium coming back out at the lower pressure Pb). Switch to nitrogen and/or use a lower pressure and/or use a fixed equilibrium time, not AUTO.
- An increasing pressure in an isolated sample cell with sample is due to contamination. Purge longer or dry the sample in an oven.

6 Calibration Routine

6.1 Calibrate V_A

Before a calibration can be done, the operator must set a few Ultrapyc parameters. Many parameters are shared between Calibration runs and Sample Volume Measurement runs. Before starting a V-added calibration navigate to the Run Parameters Menu and set the target pressure using the sequence:

Main Menu → `1 - Run Menu` → `1- Run Parameters` → `1-Target pressure`.

The "Type of gas used" shows up in the calibration report. The operator can set a descriptive name for the type of gas used using menu navigation sequence:

Main Menu → `1 - Run Menu` → `1- Run Parameters` → `8- Set Gas Type`

In this mode, the instrument will measure and store the volume of V_A. The instrument has been calibrated at the factory and should be recalibrated periodically. The Calibrate V_A mode requires the use of a known volume such as the stainless steel calibration spheres provided with the instrument.

NOTE! The first set of pressurizations is performed with an empty cell (if small cell is used the appropriate adapter sleeve should be used) while the second set of pressurizations is performed in the same cell with calibration sphere(s) inserted.

Purge mode is selected automatically by the instrument and vacuum is not used. Therefore, a vacuum pump is unnecessary for any or all calibration steps.

Ultrapycnometer 1000*e* and Ultrapyc 1200*e*: The **large V_A** is calibrated using a large cell and three calibration spheres (the single large sphere and both small spheres) while the **small V_A** is calibrated using a small cell, its adapter sleeve and one small calibration sphere.

Micro-Ultrapycnometer 1000*e* and Micro-Ultrapyc 1200*e*: The **large V_A** is calibrated using a large cell and both spheres while the **small V_A** is calibrated using a medium cell and one calibration sphere.

1. Select **2** from the main window. The window will now display:

```
        Calibration Mode
 1 - Vadded          2 - Vcell
```

2. Press **1** to bring up the V_A calibrate window. The window will prompt the user to enter which of the two added volumes, V_A, will be calibrated.

```
          V added size
1 - Large            2 - Small
```

NOTE! If the user intends to use a small cell for density measurements, select `2-Small`, and perform small Va calibration with the small cell. If the user intends to use a medium or a large cell for density measurements, select `1-Large` and perform large Va calibration with the large cell.

3. Press **1** to select the large V_A or **2** to select the small V_A.
   The display will prompt the user to enter the calibration volume, which will be used. The display will now show:

```
V added size
Cal. Volume:
```

Enter the volume of calibration sphere(s) using the digits 0-9 and the decimal point, then press "**ENTER**. The **ENTER** key will not be acknowledged until a non-zero volume has been entered. The **CLEAR** key may be used to correct errors.

NOTE! The volumes of the individual spheres supplied with the instrument can be found on the Calibration Data page in the front of this manual.

Ultrapycnometer 1000*e* and Ultrapyc 1200*e*: The Cal. Volume for the **small V_A** is the volume of 1 small sphere (7.0699 cc) and the calibration value for the **large V_A** is the total volume for the three spheres (1 large + 2 small = 70.699 cc).

Micro-Ultrapycnometer 1000*e* and Micro-Ultrapyc 1200*e*: The calibration value for the small V_A is the volume of one microsphere (1.0725 cc) and the calibration value for the large V_A is the total volume for the two spheres (2.1450 cc).

4. When the calibration volume has been entered and **ENTER** is pressed, the window will display:

```
Print at End of Run?
  1 - Yes  2 - No
```

Press **1** if the printer is connected, switched on, is on line, and an automatic printed report is desired. Otherwise, press **2**.

```
Email Report?
1 - Yes  2 - No
```

Decide if a copy of the report should be emailed to a previously specified email address.

Decide if a copy should be saved on a USB memory key (compatible memory drive device was supplied with the Pycnometer) – when selecting 1-YES, make sure the supplied memory key is plugged into one of the Ultrapyc's USB ports.

```
Save on USB key?
1 - Yes  2 - No
```

5. After pressing **1** or **2** the window will display:

```
Start Blank Run
Press Enter To Start
```

Before pressing **ENTER**, the user must ensure that the cell holder (chamber) has only the proper (large or small) empty sample cell inserted (small cell requires use of its adapter sleeve), and that it is properly sealed.
After these steps are performed press **ENTER** to begin the calibration.
The calibration run will begin with a 1-minute flow purge. The remaining purge time will be counted down in minutes and seconds.
The Ultrapyc will then proceed with the blank run measurements. Testing will continue until three consecutive runs result in a deviation equal to or less than 0.003% or 20 runs have been completed if the required deviation is not obtained. In either case, the average of the last three runs will be used to calculate the volume of V_A. See Section F, OPERATING SEQUENCE, for details.

6. After the blank run is completed, the display will show

```
Start Sphere Run
Press Enter To Start
```

The user should open the calibration chamber, insert the required calibration sphere(s) into the cell, reseal the chamber with cover, and press **ENTER**.
The Ultrapyc will then purge for 1 minute and then proceed with the sphere run. This also consists of three consecutive runs with a deviation equal to or less than 0.003% or 20 runs if the required deviation is not obtained. In either case, the average of the last three runs will be used to calculate the volume of V_A.

7. After the sphere run is completed, the display will show

```
Va Completed
Press PRINT to Print
```

If the user presses **PRINT**, the Added Volume Calibration Report is printed. The report contains essential calibration information including V_A and tabular data of PA/PB values measured for blank runs and runs with sphere as well as their percent deviations achieved in last three consecutive runs.

Press the **REV** key to display the result of the V_A calibration. For example,

```
Va Completed
Vadded: 83.8502 cc
```

This value is automatically stored in memory and is used to calculate the volume of the sample cell and the samples.

Press the **REV** key again to display the previous choices.

Press **CLEAR** to return to the Main Menu.

6.2 Calibrate V_C

In this mode, the instrument will measure and store the volumes of the three sample cell sizes. The cell chamber has been calibrated at the factory with the three standard sample cell holders. After a V_A calibration, perform a Calibrate V_c run for each sample holder. Please note that the only actual requirement for valid data is that the cell *must* be calibrated with a sample holder before that particular sample holder is used for measurements. The large and medium sample cells are calibrated using the volume of the large V_A while the small and micro cells use the volume of the small V_A. The Ultrapyc will retain in memory the calibration volume of the large, medium and either the small or the micro cell. Therefore, if the cell has been calibrated for use with a small cell holder and a micro cell holder is to be used, the cell must be recalibrated.

Ultrapycnometer 1000*e* and Ultrapyc 1200*e*: Under normal operations, calibration of the cell should be made with 3 spheres in the large cell, 1 medium sphere in the medium cell, 1 small sphere in the small cell, and no sphere in the optional micro cell.

Micro-Ultrapycnometer 1000*e* and Micro-Ultrapyc 1200*e*: Under normal operations, calibration of the cell should be made with both micro spheres in the large cell (micro), 1 micro sphere in the medium cell (meso), and 1 nano sphere in the small cell (nano). It is recommended that the nanocell be calibrated by the difference method (refer to Appendix 5).

For optimum results, when calibrating V_c (see Equation (I.15), Section I) the volume of the calibration spheres should be as reasonably close to the actual sample volume as possible. Therefore, if using the large sample cell with a small volume of sample, or a sample with low packing density, the calibration can be performed with no spheres, making V_{cal} in Equation (I.15) equal to zero, or with any combination of large and small spheres. The medium and small cells can be calibrated empty, $V_{cal} = 0$, or with one small sphere. The optional micro cell can be calibrated with the two micro spheres or empty.

NOTE! The stainless steel calibration spheres can take 15–20 minutes for complete thermal equilibration. It is recommended to leave the sphere(s) in the sample cell inside the instrument sample chamber for 15–20 minutes before beginning the sample cell calibration.

1. Select **2** from the main window. The window will now display:

```
Calibration Mode
1 - Vadded     2 - Vcell
```

2. Select **2** to bring up the V_c calibration window.
3. The display will then prompt the user to enter the size of the sample holder.

```
Choose Cell Size
Cell Size:
```

4. Press **1** for a large cell; **2** for a medium cell; **3** for a small (or micro cell in Ultrapyc) and then press **ENTER**.
5. The calibration volume, V_{cal} (volume of sphere(s) or other standard volume) is then entered.

```
Enter Cal. Volume
Cal. Volume:
```

Press **CLEAR** to delete entry errors. Press **ENTER** to accept the value.

6. The window will now display:

```
Run Mode
1 - Single     2 - Multi Run
```

If **Single** is selected, the Ultrapyc will calibrate the sample cell using one run and the "MAX RUNS" and "% DEVIATION" windows will not be displayed. If **Multi Run** is selected, the user will be requested to enter the maximum number of runs and the percent deviation allowed.

```
Multiple Run Mode
Enter Max. Runs:
```

Enter the maximum number of runs (3–100) to be used to calibrate the cell.

NOTE! If less than 3 runs are specified the instrument will default to the single run mode and the "% Deviation" window will not be displayed.

NOTE! A minimum of 5 runs are recommended to ensure complete purging of the system and to obtain good accuracy.

If three or more runs are specified, the user will be prompted to enter the percent deviation.

```
Enter Run Deviation
Deviation:   0.005   %
```

Any value from 0.001 to 100 can be entered. Press **CLEAR** to delete entry errors. Press **ENTER** to accept the value. The Ultrapyc will continue to test the cell until the percent deviation for three consecutive runs is equal to or less than the specified value or until the maximum number of runs has been reached.

NOTE! If the user selects the smallest allowable deviation (0.001 %), the maximum number of runs will most likely be used. Therefore, a deviation of 0.005 % is recommended. If the user enters 100 %, the instrument will use the maximum number of runs regardless of any deviation found and will use the last three runs to calculate the deviation and the average volume.

When the appropriate number of runs and the percent deviation has been entered, the instrument then asks if the results are to be printed at the end of the run.

```
Print at End of Run?
  1 - Yes  2 - No
```

Press **1** to print the results and the average volume of the cell at the conclusion of the run. Press **2** if a printout is not required or if no printer is attached to the Ultrapyc. Decide whether copy of the report should be emailed and /or stored on a USB memory key (a compatible memory drive key was supplied with the pycnometer).

```
Email Report?
1 - Yes  2 - No
```

```
Save on USB key?
1 - Yes  2 - No
```

When all the parameters have been entered, the window will display:

```
Vc Calibration
Press Enter to Start
```

Before starting the run, the user must ensure that the cell has the proper sample holder size and the correct calibration spheres inserted.

When **ENTER** is pressed, the run will begin with a 1-minute purge. The Ultrapyc will then proceed with the cell calibration measurements.

After the run is completed, the display will show:

```
Vc Completed
Press CLEAR for Main
```

or: Press **PRINT** to print

or: Press **REV** to review

6.3 Calibration Data Review

Press the **REV** Key. The display will now show the cell calibration value calculated for the first run of the cell.

```
Run Number: 1
Vcell: 35.8416 cc
```

Each additional depression of the **REV** Key will cause the next run to be displayed. After the last result is displayed, the average volume obtained in the last three runs is displayed.

```
Cell Volume
Average: 35.8414 cc
```

This is the value stored in memory for calculating the sample volume and density.

If the optional printer is attached, a hard copy of the above results may be obtained by pressing the **PRINT** button on the keypad. Press **CLEAR** to return to the Main Menu.

NOTE! Each cell can be calibrated with three sample cell holders. That is, the instrument will retain the volume of a large and medium sample holder as well as the small or micro sample holder. If the cell has been calibrated with a small sample holder and it is to be used with a micro sample holder, the cell must be recalibrated.

After the calibration is complete, check the Va and Vc values on the printed report.

Table D-2, Nominal Values for Va and Vc

Models UPY-30, UPY-30T, UPY-30F, and UPY-30FT		Models MUPY-30 and MUPY-30T	
Va small	12.3468 cc – 13.0431 cc	Va small-nano	1.50 cc – 1.70 cc
Va large	78.108 cc – 82.108 cc	Va large-micro	8.27 cc – 8.55 cc
Vc small	18.6739 cc – 19.6739 cc	Vc small-nano	5.26 cc – 5.72 cc
Vc medium	56.7739 cc – 59.7739 cc	Vc medium-meso	6.58 cc – 7.01 cc
Vc large	148.2739 cc – 152.2739 cc	Vc large-micro	9.62 cc – 9.99 cc
*Vc large delrin	139.2739 cc – 143.2739 cc		

(*) Optional item

The instrument should have values within the specified ranges listed above. If not, re-calibrate the instrument carefully.

7 Sample Volume Measurements (Runs) Routine

During sample analysis, the instrument will measure and display the sample volume. The Ultrapyc uses the term "**run**" to mean a volume measurement cycle of the instrument. The typical volume measurement cycle consists of; opening the venting valves and measuring the ambient pressure; opening the gas input valve to purge the sample cell; closing the vent valves and allowing the pressure to build in the sample cell until the desired target pressure is reached; when the pressure stabilizes the pressure value is saved (Pressure A), the Valve to the added volume is opened and once the pressure stabilizes this pressure is stored (Pressure B). The sample volume is calculated from these two pressure readings. The sample weight is used in conjunction with the measured sample volume to determine sample density.

The weight of the sample may be entered either before or after the sample run. This allows the sample to be weighed after out gassing if desired.

A Run can be started by menu sequence: Main Menu → `1 - Run Menu` → `3 - Start`, but *before starting a run all relevant run parameters and sample parameters should be first set.*

NOTE! For the utmost accuracy, exceeding the instrument specifications, run a V_c just prior to the analysis.

7.1 Set Run Parameters

Enter the Run Parameter Menu using sequence Main Menu → `1 - Run` → `1- Run Parameters`. These options allows the user to determine how the analyses and calibrations will be done. All of these parameters remain in effect until they are changed by the operator.

7.1.1 Set Target Pressure

Main Menu → `1 - Run` → `1 - Run Parameters` → `1 - Target Pressure`

1 – Target Pressure: Set a desired target pressure

In some cases, low pressures (e.g. 6 psig) may be desirable, particularly if the sample is compressible e.g., foams). If it is not, high target pressures (e.g., 17 psig) are preferred.

```
Enter Target Press.
Pressure: 17.00 psi
```

The acceptable range is 0.50 to 24 psig. However, the recommended range is 2 to 20 psig

Use the keypad to enter the new target pressure; press **CLEAR** to delete entry errors. Press **ENTER** to accept the new value. The new target pressure will be used for all operations, including calibration and analyses.

NOTE! For best results, the target pressure should be the same as the target pressures used to calibrate V_A and V_C. Both V_A and V_C should be recalibrated whenever a new target pressure is selected.

7.1.2 Set the Equilibrium Time

Main Menu → `1 - Run` → `1 - Run Parameters` → `2 - Equilibrium Time`

Use this parameter to control the length of time the instrument will wait before accepting a pressure reading. Shorter equilibration times can decrease the length of time an analysis takes but may lead to more scatter in the results.

Auto Mode: Enter zero as the equilibration time and the pressure reading will be taken only after it has become stable. An error code will be displayed if the pressure continues to be unstable.

NOTE! If a fixed equilibration time (i.e. non-zero) is selected, the error detection for unstable pressure in the cell is disabled.

Select **2** from the run parameters menu to display the equilibration time menu.

```
Enter Equil. Time:    10
   Equil Time:  Auto
```

Use the keypad to enter the new equilibration time in seconds. The valid range is 10 to 999 seconds. Entering 0 or no value will cause the instrument to operate in the automatic pressure stability (Auto) mode.

Press **CLEAR** to delete entry errors. Press **ENTER** to accept the new value. The new value will be used for all operations, including calibration and analyses.

7.1.3 Set the Purge settings

Main Menu → `1 - Run` → 1 – `Run Parameters` → `3-Purge`

The purge mode is then selected:

```
Enter Purge Mode
1 - Flow  2 - Pulse  3 - Vac
```

For most accurate results, samples should be properly purged or outgassed before commencing an analysis. Three outgassing modes are built into the Ultrapyc. Each can be selected from the keypad when prompted by the display.

Selecting **1** will cause the gas to flow through and purge the system for 1-199 minutes prior to the start of the analysis.

Press **2** to select the pulse mode, which pressurizes the system to about 3 psig and then releases the gas. This is repeated from 3-199 times prior to the start of the run. 9 times is suggested for most materials, which do not have an inordinate amount of absorbed moisture.

Press **3** to evacuate the sample prior to analysis (requires an installed optional vacuum pump). The user may select any time from 1 minute to 199 minutes. 5 minutes is appropriate for many materials.

Enter the desired purge in decimal minutes or pulses (minimum 1 minute or 3 pulses) using the digits **0**–**9** and the decimal point, then press **ENTER**. The **CLEAR** key may be used to correct entry errors.

If a purge of less than one minute or 3 pulses is specified or no purge is given then the instrument will use the default purge of one minute or 3 pulses.

CAUTION! Preferably, the flow purge mode should be used with fine powders in order to prevent the elutriation of sample particles. If vacuum mode is used, make sure the evacuation rate regulator is not open by more than 2 turns.

7.1.4 Set the Run Mode

Main Menu → `1 - Run` → 1 – `Run Parameters` → `4 - Run Mode`

The Run Mode routine is used to set the single or multi-run and (in case of later one) specify also the maximum number of runs, number of runs to average, and the desired run deviation.

If `1-Single` is selected, the Ultrapyc will run the sample cell using one run.

```
Run Mode
1-Single 2-Multi Run
```

When a multi-run analysis is selected, the Ultrapyc will do at least three runs on the sample. If the deviation for the three runs is equal to or less than the requested deviation the analysis will end and the average of those three runs will be used to calculate the statistics. If the deviation is greater than requested, the runs will continue. This will continue until the maximum number of runs is reached or the deviation requirement is met. If the number of runs exceeds the number of

runs to be averaged then only the last "n" runs will be used for calculations; where "n" is the number of runs to be averaged as specified by the operator.

NOTE! If less than 3 runs are specified the instrument will default to the single run mode and the % deviation window will not be displayed.

NOTE! A minimum of 5 runs is recommended to ensure complete purging of the system and to obtain good accuracy.

```
Multiple Run Mode
Enter Max. Runs:
```

Enter the maximum number of runs (3–100) to analyze all of the sample cells defined as entered. Press **CLEAR** to delete entry errors. Press **ENTER** to accept the value.

If three or more runs are specified, the display shows:

```
Enter Runs to Avg
Runs to Avg:
```

With this option, the user selects the maximum number of runs to be used for statistics at the end of the analysis.

Enter the percent deviation:

```
Enter Run Deviation
Deviation:
```

Any value from 0.001 to 100 can be entered. The Ultrapyc will continue to test the cell until the percent deviation for the consecutive number of runs to be averaged is equal to or less than the specified value or until the maximum number of runs has been reached. If 100% has been entered, the instrument will use the maximum number of runs. Press **CLEAR** to delete entry errors. Press **ENTER** to accept the value.

NOTE! If the user selects the smallest allowable deviation (0.001 %), the maximum number of runs will most likely be used. A deviation of 0.01% is recommended for filled cells. A cell filled to 1/10 of its capacity should be analyzed with a deviation of no less than 0.1%. The value entered for percent deviation is a percentage of *measured* volume. Therefore, the smaller the actual sample volume, the larger the deviation should be requested. For example, a value of 0.03 % of 10 mL (specification for filled small cell) is equivalent to 0.3 % for 1 mL and 3 % for 0.1 mL.

7.1.5 Set the Cell Size

Main Menu → `1 - Run` → `1 - Run Parameters` → `5 - Cell Size`

The display will then prompt the user to enter the size of the sample holder. Enter a **1** for the large cell, **2** for the medium cell, and **3** for the small cell. Press the **ENTER** key when the desired size is displayed:

```
Choose Cell Size
Cell Size: Large
```

7.1.6 Set Print/Send Reports

Main Menu → `1 - Run` → `1 - Run Parameters` → `6 - Print/Send Reports`

Report files are always saved on the Ultrapyc file system. Select this menu option to determine how report files generated from the run will be distributed. Files can be printed to a USB printer, copied to a USB flash memory device, or emailed to the user:

```
Print at End of Run?
   1-Yes     2-No
```

Select yes, if a copy of the report should be printed on a supported USB printer connected to one of the Ultrapyc's USB ports.

```
Email report ?
1-Yes     2-No
```

If a valid email address has been entered using the PycWeb → Email Parameters web page, the Ultrapyc will email a copy of the report to the user. If the Ultrapyc is not connected to a computer network with access to a mail server, select `2-No` for this option.

If a USB Flash memory storage device (a compatible USB storage device was supplied with the pycnometer) is inserted in one of the Ultrapyc's USB ports, a copy of the report can be stored on it. For compatibility reasons, when the Ultrapyc copies report files to USB flash memory devices

the report file names are shortened to 8 characters plus the .txt or .pdf extension. See Section D.8, report files, for an explanation of how the file names are shortened.

```
Save on USB key?
 1-Yes     2-No
```

NOTE! A compatible HP printer can be purchased directly from Quantachrome (P/N 38093), see Appendix 4.

NOTE! Due to variation in hardware, certain USB memory drives might not work properly with the Ultraypc. A compatible USB flash memory storage device was supplied with the Pycnometer.

7.1.7 Set Pressure Units

Main Menu → `1 - Run` → `1 - Run Parameters` → `7-Set pressure units`

```
Select pressure units
 0 for psi, 1 for kPa
```

Choose whether the Ultrapyc should report pressure in pounds per square inch gauge (psig) or in kilopascals (kPa). The default value is 0 – psi.

7.1.8 Set Gas Type

Main Menu → `1 - Run` → `1 - Run Parameters` → `8-Set Gas Type`

```
Enter Gas ID
ID: Nitrogen
```

Enter a name used to identify the type of gas used during the run or calibration. The name can be up to 16 charters in length. Pressing the **CLEAR** key will clear the gas ID name. Enter numeric characters with the numeric keys on the keypad. Letters can be chosen by scrolling through the alphabet using the **UP** and **REV** keys, press **ENTER** to select the letter displayed, press **ENTER** again when the entire ID string has been entered.

7.2 Set Sample Parameters

The sequence "Main Menu → `1 - Run` → `2 - Sample Parameters`" invokes the Sample Parameters routine. This routine allows the Ultrapyc operator to enter the sample weight and sample identification (ID) name (up to 16 characters).

7.2.1 Set Sample Weight

The Ultrapyc can obtain the sample weight from a Digital Balance connected to the serial port or by manual entry from the keypad. See the "Balance Mode" routine description in Section D.4.3 and Appendix 3, for more details.

7.2.1.1 Digital Balance Mode

When set in "Balance Mode" the Ultrapyc display cycles through messages "Waiting for scale" and "Press Enter When OK."

```
Waiting for scale
Weight: 0.0000 grams
```

If the Balance and Ultrapyc are communicating correctly, the weight will change in the display window. Press the **ENTER** key when the weight is set correctly. One of the parameters set when "Balance Mode" was selected was the serial-port timeout. The Ultrapyc will wait for the length of time specified by the timeout parameter for the weight to be transmitted and the user to press the **ENTER** key.

```
Press Enter When OK
Weight: 42.1167 grams
```

If the operator does not press the **ENTER** key within the timeout period the Ultrapyc will cycle through the two message displays:

```
Error 15 occurred
Serial port timeout
```

and

```
Error 15 occurred
Restart: Press CLEAR
```

If this happens, check the serial port cable and serial port settings of both the Ultrapyc and the Digital Balance. Press the **CLEAR** key to try again.

7.2.1.2 Manual Entry

If the "Balance Mode" was set to "keypad," enter a sample weight (up to 6 digits) using the digits 0-9 and the decimal point. Any value from .000001 to 999 may be entered. The **CLEAR**

key may be used to clear the weight displayed, in order to correct any entry errors. Press **ENTER** when the correct weight has been entered.

```
Enter Weight
Weight: 12.1234 grams
```

7.2.2 Set Sample ID

Enter the sample ID (up to 16 characters):

```
Enter Sample ID
ID: 123456ABCDEF
```

Sample ID, up to 16 characters long, can be entered. Numerical values are entered directly from the numbers on the keypad. Alphabetic characters and "-" are entered by pressing the **UP** or **REV** keys to scroll through the alphabet. Press the **ENTER** key once to accept the character displayed press the **ENTER** key again to accept the displayed sample ID. The sample ID can be cleared by pressing the **CLEAR** key.

7.3 Start Run

Main Menu → `1- Run` → `3 - Start`.

Once all the Run and Sample Parameters have been set, begin the run by selecting `3 - Start`. The sample volume measurement cycle will run to completion, the results will be stored in a report file on the Ultrapyc file system. The report will be printed, emailed, and/or copied to a USB memory key if the operator chose one or more of those options. When the run is completed successfully, the Ultrapyc display will cycle through the messages “Press PRINT to PRINT”, “Press REV to Review” and “Press CLEAR for Main.”

If an error occurred during the test, the Ultrapyc will stop the measurement cycle and display an error code and a descriptive error message. The Ultrapyc messages will cycle between the error message and a message that tells the operator to press the **CLEAR** key to restart. Here is an example of a low-pressure error condition that occurred when the pressure tank was disconnected.

```
Error 2 occurred
  Low Pressure
```

```
Error 2 occurred
Restart: Press clear
```

7.4 Review Results

After the run is completed, the display will cycle through the following choices.

```
Run Completed
Press PRINT to Print
```

```
Run Completed
Press REV to Review
```

```
Run Completed
CLEAR for Next Run
```

If the **PRINT** key is pressed, a printout of all of the results, run parameters and statistics will be generated.

Pressing the **REV** key will start a review of the measurement results. The first result displayed is the average volume for all of the runs of the measurement.

```
Average Volume
0.0931 cc
```

Pressing the **REV** key again will display the calculated density for the first run. Note that if the volume is zero the density value is undefined (division by zero) and will not be displayed.

```
Average Density
0.9643 g/cc
```

The volume standard deviation is displayed:

```
Volume Std. Dev.
    0.0004 %
```

The sample weight is displayed:

```
  Sample Weight
0.0898 grams
```

By continuing to press the **REV** key, the user can scroll through the volume and density measurements for each run. When all of the runs have been displayed, pressing the **REV** key again will start the review sequence over.

Whenever the "Sample Weight" message is displayed, the operator has an opportunity to change the sample weight. The sample weight can be changed by pressing the **CLEAR** key and entering a new weight at the keypad, or accepting the weight transmitted over the serial port from a digital balance. If the sample weight is modified, the density for each run and the average density are recalculated. The new densities will be displayed when the operator continues to press the **REV** Key. A new report file will be generated. The new report file will be distributed according to the PRINT/SEND reports user settings.

```
Enter New Weight
  Weight: 8.98
```

When the data review is complete, the Ultrapyc returns to cycle through the messages "Press PRINT to PRINT", "Press REV to Review" and "Press CLEAR for Main." Press **CLEAR** to return to the Run Menu.

8 Result Reports

The results from V_A calibration, V_c calibration and all sample-volume-measurement runs are stored on the Ultrapyc in the form of report files. The report files are stored in flash memory, and will persist even if power to the Ultrapyc is turned off. Two copies of each report are generated, one in plain text format suitable for import into a spreadsheet (*.txt) and one in Portable Document Format (.pdf), which can be printed and embedded in other reports. The .pdf copy of the reports contains the same information as the .txt file, but is formatted to look better when printed.

The base name of a report generated from V_A calibration is vaReport.txt and vaReport.pdf. The base name of a report generated from V_c calibration is vcReport.txt and vcReport.pdf. The base name of sample-volume-measurement (RUN) reports generated by the Ultrapyc is ultraReport.txt and ultraReport.pdf. Because the Ultrapyc can store many report files the report

file names need to be differentiated and correlated to a particular run. The Ultrapyc extends the ultraReport.txt file name by appending the sample ID used during the run onto the base file name. For example if the sample ID used during a run was MySample, the extended file name of the report would be ultraReportMySample.txt(.pdf). The user can retrieve the results from the measurement run created when the sample ID was MySample by downloading the report named ultraReportMySample.txt and/or ultraReportMySample.pdf.

The pdf version of the file contains the Quantachrome logo in the header. This can be changed by replacing the file "CompanyLogo.eps" on the pycnometer with your own logo file. The file must be in Encapsulated PostScript format and named "CompanyLogo.eps" (case sensitive). Either the command line FTP program or FileZilla (see Appendix 7) can be used to replace this file. It is recommended that a copy of the file be made before overwriting it, in case it is necessary to restore the Quantachrome logo.

Sometimes a user will run multiple runs without changing the Sample ID. The user may want to overwrite the old report file with data generated by the new run, or the user might want to save all reports run with the same Sample ID using different file names. To select how result files with the same Sample ID will be stored, set the Ultrapyc system parameter:

Main Menu → `2-System Settings` → `6-Number Report Files`.

Answering "yes" to "Number report files?" will result in an additional enumerated extension of the report file name. For example if the file ultraReportMySample.txt already exists the results of the new run will be stored in a new file named ultraReportMySample-1.txt. If the test is run a third time the results will be stored in be ultraReportMySample-2.txt. If the user does not want to keep older report files when the same Sample ID is used, then answer "no" to "Number report files?" In that case, each time the run is repeated the results are stored in the same file named ultraReportMySample.txt with the old results being replaced by the newer results.

Up to 200 of each basic type of report file can be stored on the Ultrapyc file system. The reports can be viewed using PycWeb and a web browser, the reports can be copied to a USB memory storage device, and the report files can by transferred from the Ultrapyc to another computer using standard network File Transfer Protocol (FTP) commands. An open source graphical-user-interface FTP client called FileZilla is distributed with the Ultrapyc. FileZilla can be used to download files from the Ultrapyc to a computer workstation. See Appendix 7, Report File Transfer and Firmware Update *via* FTP or *via* FileZilla, for more information on its use.

Report files are copied to a USB flash memory device (sometimes called a memory key or memory stick) when a measurement run completes if the user selected this option using sequence Main Menu → 1-Run → 1-Run Parameters → Print/Send Reports → Save Reports on USB. Additionally the reports stored on the Ultrapyc can be transferred, all at once, to USB flash memory device. Transfer all report files to a USB key using sequence Main Menu → 3-System Settings → 4-Copy Reports to USB. Due to file system compatibility issues, report files copied from the Ultrapyc to a USB memory device will have their file names shortened to eight characters plus a three-charter extension.

The scheme used to shorten the file name is: (i) keep the first two characters and the last six characters of the pre-extension portion of the name, and then (ii) add the three-character extension. For example if the file ultraReportMySample.txt is copied to the USB key the name of the file on the USB key will be ulSample.txt, and if the file ultraReportMySample-1.txt is copied

the file name on the USB key will be ulmple-1.txt. Other examples are vaReport.txt on the Ultrapyc
becomes vaReport.txt on the USB key, vcReport.txt becomes vcReport.txt, vaReport-1.txt becomes vaport-1.txt, and vcReport-1.txt becomes vcport-1.txt.

It may be undesirable to store too many report files on the Ultrapyc. For instance, when viewing report files using PycWeb, it may be too tedious to scroll through all the reports looking for a particular file. Report files can be deleted from the Ultrapyc using sequence Main Menu → `3-System Settings` → `5-Delete Reports`.

NOTE! Due to variation in hardware, certain USB memory drives might not work properly with the Ultrapyc. A compatible USB flash memory storage device was supplied with your Pycnometer.

E. ULTRAFOAM OPERATION

1 Navigation Through The Ultrafoam Menus

The keypad can be used to navigate through the various UltraFoam menus in order to set an UltraFoam parameter or call an UltraFoam routine. The UltraFoam menu "tree" is arranged almost exactly like the Ultrapyc menus diagrammed in earlier chapters. The only difference is the additional parameters and routines required for foam mode operation.

To access the foam mode functions, first choose the Foam instrument:

Main Menu → `9-Choose instrument` → `2-UltraFoam`

2 Foam Mode Run Procedure

The foam mode run procedure can be set using the keypad sequence:

Main Menu → `1-Run Menu` → `4-Run Procedure`

The four procedure options are 1-Uncorrected, 2-Corrected, 3-Compressibility, and 4-Cell Fracture. The procedures are described in detail in Section E, ULTRAFOAM OPERATION. If the compressibility procedure is chosen, the operator must set the incremental pressure, lower and upper pressure limits, and the maximum allowable compressibility parameters. If the cell fracture procedure is chosen, the operator must set the incremental pressure, lower and upper pressure limits, and the maximum allowable cell fracture.

3 Additional Foam Mode Sample Parameters

The sample parameters routine can be accessed using the keypad sequence:

Main Menu → `2-Sample Parameters`

In addition to the sample ID and sample weight, the geometric volume of the foam sample needs to be set. The foam sample volume can be set manually using option `1-Volume`. If the shape of the foam sample is rectangular or cylindrical, the sample dimensions can be entered and the pycnometer will calculate the geometric volume. To enter the sample dimensions choose `2-Dimensions` and the routine will prompt for shape and dimension.

UltraFoam Menu Map

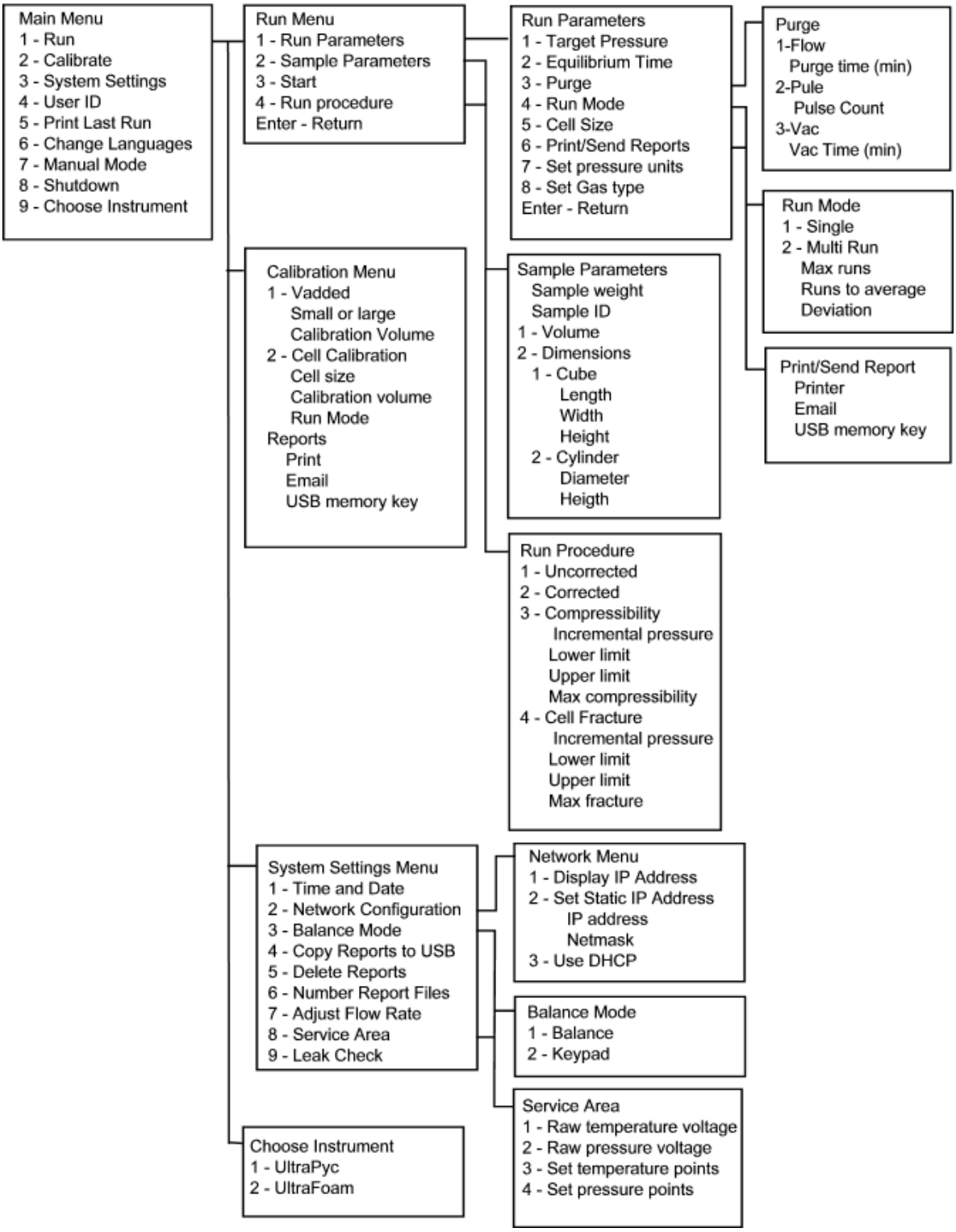

4 Foam Mode Operation

4.1 Sample Preparation

The foam sample should have as regular a cubic or cylindrical geometry as possible. Therefore, it will normally be necessary to cut a test piece from a larger sample of foam polymer. Use a fine toothed hobby saw or craft knife to cut the specimen such that it has smooth surfaces (within the limitations of the cellular nature of the material!) A single 2.5 cm x 2.5 cm x 2.5 cm (1 in x 1 in x 1 in) cube is recommended for use with the *medium* sample cell, or two such cubes, if preferred, for use with the *large* sample cell. Measure the length, width, and height of each cube. Cylinders can be conveniently cut from sheet foam by using a cork borer or similar tool. Cut as many pieces as are required to form a stack of disks, which will almost fill the sample cell being used. Measure the thickness of a disk and multiply by the number of disks to find the overall height of the cylindrical sample. Samples should be allowed to age for 24 hours or more to allow monomers, plasticizers, and blowing agents to completely disperse from the sample. Otherwise, these high vapor pressure substances will cause significant interference in the subsequent analysis. Enter sample dimensions in the Sample Parameters Menu and have the ULTRAFOAM calculate the geometric sample volume automatically, or calculate the sample volume by hand and enter the volume manually.

4.2 Calibration

If the instrument requires calibration, follow the same calibration procedures used when the instrument is operated in Ultrapyc mode. The added volume is calibrated first followed by a cell volume calibration.

4.3 Foam Volume Measurement Cycle (Run)

4.3.1 Run Menu

Selecting `1 – RUN` from the main menu brings up the following menu choices:

1 – Run Parameters
2 – Cell/Sample Info (Parameters)
3 – Start
4 – Run Procedure
ENTER – Main Menu

4.3.2 Run Procedures

Selecting **4** from the RUN MENU displays the various run procedures that can be performed by the instrument.

1 – Uncorrected
2 – Corrected
3 – Compressibility
4 – Cell Fracture

Each of the procedures is described in detail below. The number after the title, "Procedure," is the last procedure selected and is the analysis that will be performed until it is changed. **ENTER** returns the operator to the RUN MENU.

4.3.3 Uncorrected Open and Closed Cell Measurement

Cellular or foam polymers contain both closed cells, which are wholly surrounded by solid polymer, and open cells, which communicate with the exterior of the sample. This procedure measures the volume of the sample, which represents the combined volume of closed cells and the polymer itself (pycnometric volume). By difference from the geometric or envelope volume of the sample, the closed cell volume is calculated and presented as a percentage of the geometric volume, or *closed cell content*. This uncorrected procedure does not take into account those closed cells, which are cut open during sample preparation.

By definition:

Closed cell content = (pycnometric volume/geometric volume) x 100%

Open cell content = 100% - Closed cell content

A single run is recommended unless the sample can be demonstrated to be completely unaffected by the measurement process.

Target pressure should not be so high as to cause significant compression. A target pressure in the range 3 – 6 psig is recommended.

Remember, low measurement pressures might require adjustment of the flow rate needle valve and/or gas cylinder pressure to prevent gross overshoot of the lower target pressures (the larger the sample cup the slower the pressure builds, the smaller it is the faster it pressurizes).

4.3.4 Corrected Open and Closed Cell Measurement

This procedure takes into account those closed cells, which are cut open during sample preparation. The procedure applies only to cubes. The measurement is a two-step process: (i) first the whole cube (or cubes) is analyzed for uncorrected open cell content; then (ii) user is prompted to prepare the sample, which in this context means removing the specimen from the analysis chamber, and *trisecting* the cube into eight pieces by cutting length, width, and height in half. All eight pieces are returned to the sample chamber and the chamber cover is closed. When the **ENTER** key is pressed, a second volume measurement is made and the open cell content is corrected for the closed cells which were cut open during the *initial* specimen cutting.

A single run is recommended unless the sample can be demonstrated to be completely unaffected by the measurement process.

Target pressure should not be so high as to cause significant compression. A target pressure in the range 3 – 6 psig is recommended.

Remember, low measurement pressures might require adjustment of the flow rate needle valve and/or gas cylinder pressure to prevent gross overshoot of the lower target pressures (the larger the sample cup the slower the pressure builds, the smaller it is the faster it pressurizes).

4.3.5 Compressibility

This procedure measures both the compressibility of the specimen and the uncorrected open cell content as a function of increasing applied pressure. The user specifies a starting pressure (no less than 2 psig is recommended), an ending pressure (at least 10-12 psig is recommended), and a pressure increment (an interval of 1or 2 psi is recommended). A single run is performed at each pressure. Note that the actual pressure achieved during each run will not be exactly that computed from “starting pressure,” “end pressure,” and “pressure increment,” because of sample compressibility and different flow rates into the sample chamber at increasing pressures. Be sure that the gas input pressure into the instrument is set to approximately 2 psig, but no more than 3 psig, above the ending target pressure.

Remember, low measurement pressures might require adjustment of the flow rate needle valve and/or gas cylinder pressure to prevent gross overshoot of the lower target pressures (the larger the sample cup the slower the pressure builds, the smaller it is the faster it pressurizes).

Sample compression is calculated as the percentage volume decrease with respect to the first volume measured at the lowest (starting) target pressure.

This test is extremely useful in determining whether the open/closed cell measurement is significantly affected by the pressure applied to the sample without manually having to rerun the sample many times.

This test does not differentiate between the change in specimen volume caused by reversible deformation (compression) and that caused by permanent damage (fracture). Fracture can be eliminated as a possible cause by re-running this procedure. Repeatable behavior indicates reversible deformation only.

4.3.6 Cell Fracture

This procedure measures both the uncorrected closed cell content of the specimen and the degree to which the cellular structure is ruptured or *fractured* as a function of increasing applied pressure. The user specifies a starting pressure (no less than 2 psig is recommended), an ending pressure (at least 10-12 psig is recommended), and a pressure increment (an interval of 1or 2 psi is recommended). A single run is performed at each pressure, with a re-run at the starting pressure before a measurement at a new (higher) pressure. That is, the volume measurement progresses from one target pressure to the next pressure via a reference measurement at the starting pressure. Note that the actual pressure achieved during each run will not be exactly that computed from starting pressure, end pressure, and pressure increment because of sample compressibility and different flow rates into the sample chamber at increasing pressures. Be sure that the gas input pressure into the instrument is set to approximately 2 psig, but no more than 3 psig, above the ending target pressure.

Remember, low measurement pressures might require adjustment of the flow rate needle valve and/or gas cylinder pressure to prevent gross overshoot of the lower target pressures (the larger the sample cup the slower the pressure builds, the smaller it is the faster it pressurizes).

Cell fracture is calculated as the percentage volume decrease with respect to the first volume measured at the lowest (starting) target pressure.

This test is extremely useful in determining whether the open/closed cell measurement is significantly affected by the pressure applied to the sample without manually having to re-run the sample many times.

This test differentiates between the change in specimen volume caused by reversible deformation (compression) and one caused by permanent damage (fracture), but it necessarily takes longer than the compressibility test due to the many reference measurements at the lowest pressure.

If COMPRESSIBILITY or CELL FRACTURE is selected, the instrument will request the incremental pressure, lower and upper limits (psig) maximum value.

F. OPERATING SEQUENCE

This section contains an explanation of the operating sequence employed in the Ultrapyc to determine calibration and sample volumes. This explanation includes a description of the state of the valve status LEDs at each step of the measurement.

Every run on the Ultrapyc includes the following steps:

1. The cell goes through a purge. This purge is by default a one minute flow in the CALIBRATE modes. In the case of sample measurements ("Run Parameters") the purge is defined by the operator (flow, pulse, or vacuum).
2. The cell is vented to ambient and a zero pressure reading is taken.
3. The cell is pressurized to the target pressure with V_A isolated and a pressure reading is taken.
4. V_A is then introduced into the system (resulting in a decrease in pressure) and a pressure reading is taken.
5. The cell is then vented to ambient.

NOTE! The CALIBRATE V_A mode actually consists of two sets of runs, the first performed with the empty cell while the second is performed with the calibration sphere installed.

NOTE! During the analysis, the internal ambient temperature of the Ultrapyc is displayed. This value is part of the report if a printout is requested or if the data are saved on a computer.

Figure F.1 shows the status of the system during setup and until an operating mode is selected. Both the gas input and vacuum valves are closed, which is indicated by the valve status LED being off. The V_A input valve and the vent valve are open to atmosphere, ensuring that the cell is at ambient pressure.

When the purge begins, the valve states change as shown in Figure F.2. The display will indicate the purge remaining in minutes and seconds (or number of pulses). At the end of the purge period, the measurement phase will begin.

As shown in Figure F.3, the cell is first vented to ambient. When a stable pressure is reached, the Ultrapyc acquires and stores a zero pressure value. Then the V_A input valve closes as shown in Figure F.4. Next, the vent valve is closed as shown in Figure F.5.

Approximately 6 seconds later, the cell input valve opens and begins to pressurize the cell as shown in Figure F.6. The pressurization continues until the desired cell pressure is reached.

When the cell pressurization is complete, the cell input valve closes as shown in Figure F.7. If equilibration time is *not* preset, the Ultrapyc will wait until a stable pressure is detected and will then acquire and store the cell pressure.

This pressure is displayed to the user as:

```
Run Number: 1
Press A: 19.7570
```

where "#1" is the run number and "19.7570" is the cell pressure in psig with V_A out.

The V_A input valve will then open as shown in Figure F.8. The introduction of V_A into the system will cause a pressure drop, which is proportional to the change in volume due to the introduction of V_A. When the pressure has stabilized, the system will acquire and store the cell pressure. This pressure will be displayed to the user as:

```
Run Number: 1
Press B: 10.2148
```

where "10.2148" is the cell pressure in psig with V_A in.

If a preset equilibration time is used, the display will be modified to show temperature or the previous pressure and time remaining (in seconds) to acceptance of the pressure value.

The Ultrapyc will then open the vent valve as shown in Figure F.9 to return the cell to ambient pressure.

If a preset equilibration time is used, the display will be modified to show temperature or the previous pressure and time remaining (in seconds) to acceptance of the pressure value.

```
Run Number: 1
Pa = 19.7573        Eq: 10s
```

```
Run Number: 1
T = 24.9 ˚C         Eq: 10s
```

The Ultrapyc will then open the vent valve as shown in Figure F.9 to return the cell to ambient pressure.

At the completion of each run, the volume and density will be displayed:

```
Run Number: 1
Volume 56.23542 cc
```

```
Run Number: 1
Density: 1.00875 g/cc
```

After a short vent period, the instrument will begin the next run (if required). After the analysis is complete, the system will be in the state shown in Figure F.1.

The sample may now be removed and the results displayed by the operator. The Ultrapyc will indicate this by displaying the Run Completed Window.

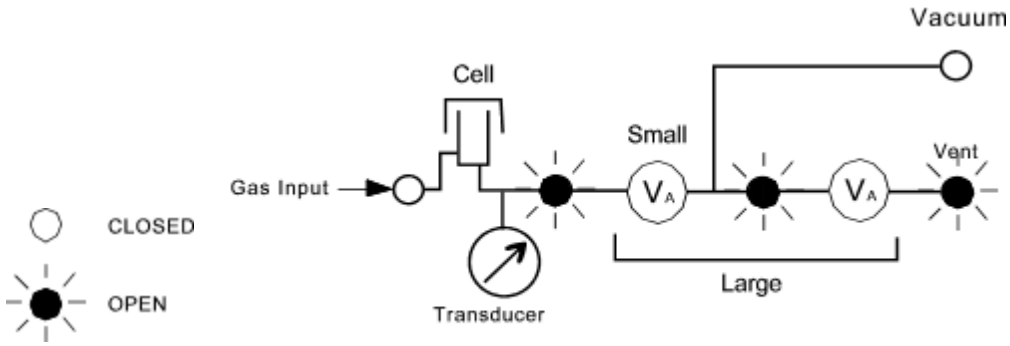

Figure F.1, Initial System Status.

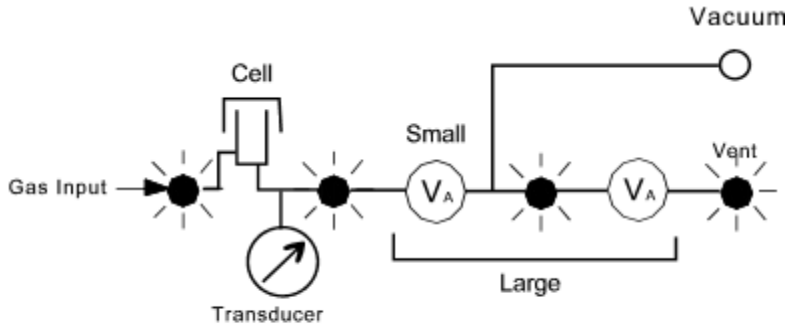

Figure F.2, Flow Purge.

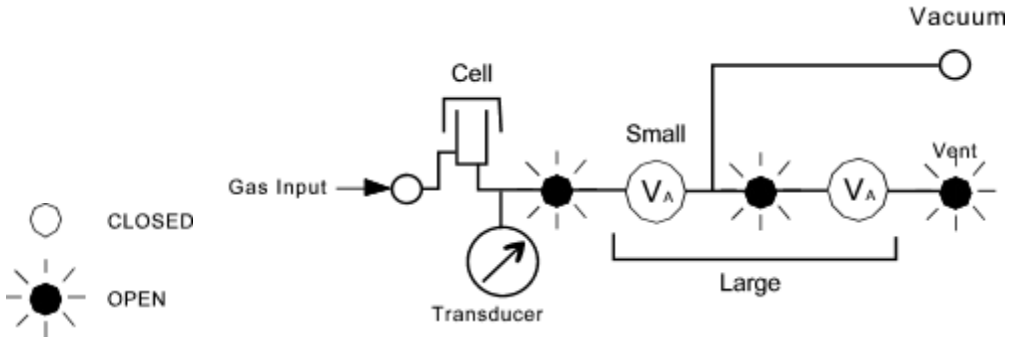

Figure F.3, System Vented to Ambient (Zeroing Transducer).

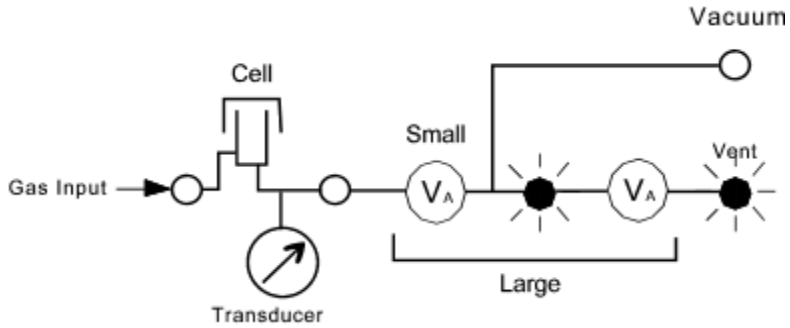

Figure F.4, V_A valve Closed (Checking for Stability in Isolated Cell Chamber).

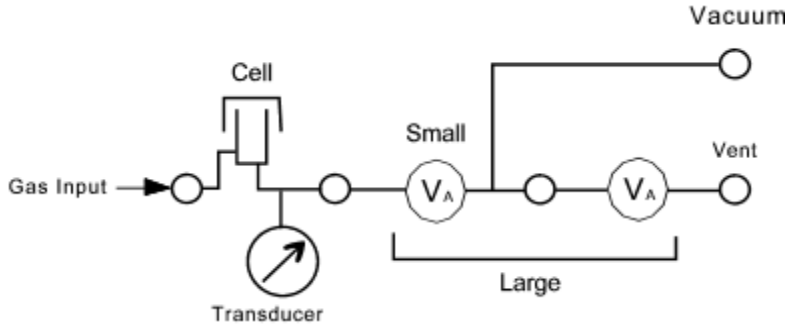

Figure F.5, Vent Valve Closed.

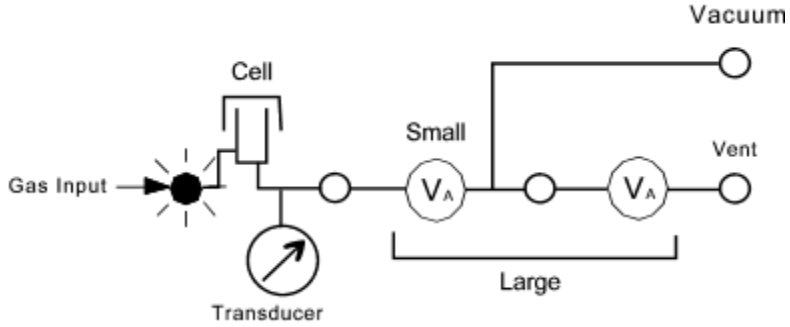

Figure F.6, Pressurizing Cell.

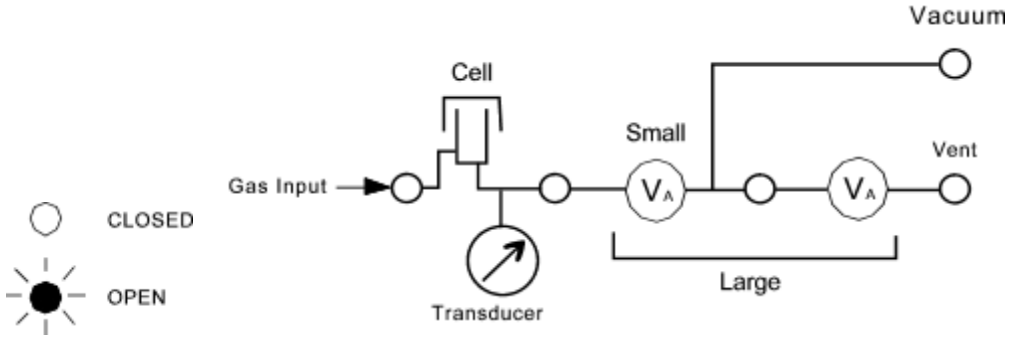

Figure F.7, Input Valve Closed (Reading Press A).

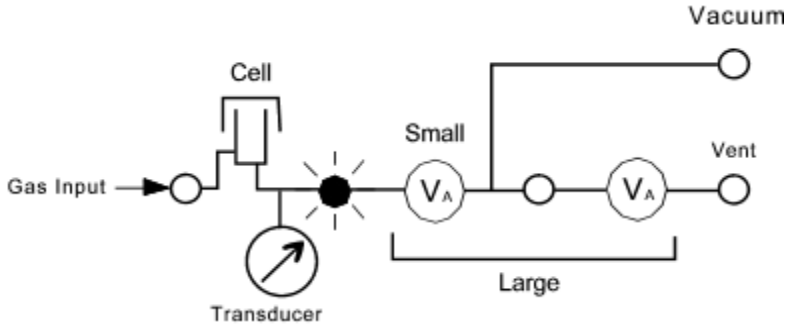

Figure F.8, V_A Input Valve Open (Reading Press B).

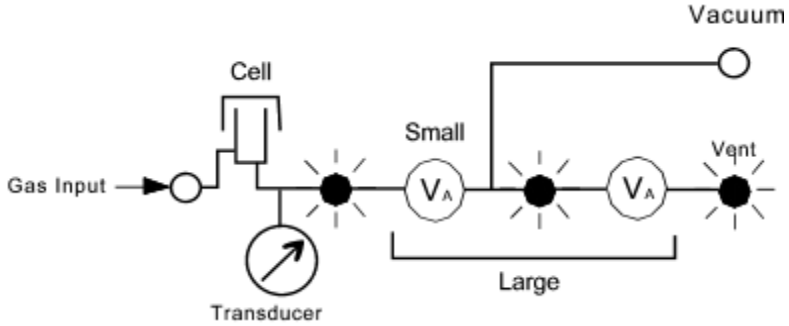

Figure F.9, Venting Cell + V_A.

G. SOURCES OF ERROR

Under normal operating conditions (using filled sample cells), the user can expect acquired deviations less than ±0.01% using the large sample cell. With the medium and small sample cells, the acquired deviation should be less than ±0.015%.

Factors leading to errors in excess of those indicated above are:

1. Contaminated sample producing a vapor pressure.
   Many samples can contain impurities on their surface and from within pores. The presence of these impurities can affect the results in several ways:
   a) The actual weight of the sample is less than the weight indicated when weighed.
   b) Contaminants fill pores causing a larger sample volume to be indicated.
   c) Volatile impurities will cause erroneous results due to the vapor pressure being added to the gas pressure.
2. Cell and sample not at thermal equilibrium due to transferring from a different temperature environment or handling.
3. The gas tank is not at the same temperature as the Ultrapyc, thus causing a thermal effect during operation.

It is important that sample cells and calibration spheres be kept at the same temperature as the sample compartment to avoid drift. The built-in storage compartment is insulated and is at the same temperature as the instrument. Therefore, it is an ideal location for storing up to three sample cells and the calibration spheres. If either the V_A and sample cell are to be calibrated each day, the cell and spheres should be placed in the covered sample cell compartment the night before to insure that they are at thermal equilibrium.

All of the above sources of error can be readily eliminated by calling for the maximum purge and by permitting the maximum number of runs possible to be performed *consistent with the time available*. Increasing the purge and number of runs will insure eventual cleanliness of the sample and complete thermal equilibrium of the sample, sample cell and other system components.

Other sources of errors include non-ideal gas behavior. Equation (I.10) (see Section I, THEORY) is derived using the equation of state for an ideal gas; therefore, dry helium is recommended for use in the Ultrapyc. However, dry nitrogen can also be used at room temperature with less than 0.1% error. When analyzing vegetable matter, materials containing cellulose or low-density polymers (including foams) it is recommended that nitrogen or sulfur hexafluoride (SF_6) be used instead of helium because helium can diffuse into the solid matter and across cell walls. When using SF_6, care should be taken to operate the unit in a well-ventilated area.

If air or other gases are used which contain adsorbable impurities, the pressure readings will be affected due to adsorption on the powder surface. The extent of the resulting error depends upon the amount and nature of the impurities as well as the solid's surface area.

An additional source of error caused by high surface area powder is the annulus volume created between the powder surface and the center of mass of the gas phase molecules at the interface. Assuming that the closest approach of the center of mass of the gas molecules to the powder surface is 0.5Å, 5×10^{-11} meter, and that the powder surface is in the order of 1000 square meters per gram, there will be an annulus volume of 5×10^{-8} cubic meters (5×10^{-2} cm^3) per gram of powder. Thus, with large samples, 10 grams or so of high specific surface area, volume errors of

0.5 cm^3 can occur. Corrections for this error can be made with knowledge of the gas molecules' effective diameter (i.e., van der Waals diameter) and the powder's specific surface area.

1 Additional Recommendations

1. Allow 1-hour for the instrument to warm-up to full thermal equilibrium. It is recommended that the Ultrapyc be left powered on indefinitely.
2. The cover must be screwed down tightly to achieve metal-to-metal contact. The O-ring must be cleaned and lubricated with a light film of vacuum grease. Any dirt on the cell lip or the cover, which makes contact with the cell lip, will introduce errors. These surfaces must be kept clean. The cell should also be kept covered when the instrument is not in use to prevent moisture and other contaminants from entering the system.
3. Maximum accuracy is achieved if the instrument is frequently recalibrated to allow for volumetric changes in components with ambient temperature variations. It is recommended that both V_A and V_c be recalibrated, if the ambient temperature is suspected to have changed significantly.
4. Whenever a new target pressure is selected, the sample cell should be recalibrated at the new pressure. For the greatest accuracy, V_A should also be recalibrated.
5. Whenever possible, the large sample cell should be employed and should be filled with powder and tapped to minimize void space. The large cell, filled to over 50% of its volume (recommended that cell is at least ¾ full) can be expected to yield results within ±0.02% of the correct value. Accuracy decreases as the void volume within a cell increases.
6. The small cell is only to be used when the quantity of sample is limited. Accuracy and repeatability will deteriorate to about ±0.03%, when the medium and small sample cells are used, because even the extremely small effect due to void volumes, vapor pressure from the sample, and failure to reach thermal equilibrium can have a significant influence on the results due to the small volumes being measured.

Accuracy depends upon the applicability of the ideal gas equation of state. Both N_2 and He obey the ideal gas laws at room temperature. Samples, which are severely contaminated by volatile materials, may produce adequately high vapor pressures to cause deviations from the ideal gas laws. It is recommended that these materials be more extensively purged and that repetitive analyses be performed until constant results are obtained. Some low-density polymers and vegetable matter may absorb some helium into the solid structure. This may be indicated by unstable pressure errors, or unreasonable density values. In those cases, nitrogen is preferred.

2 Error Messages

The design of the Ultrapyc includes the capability to detect certain conditions, which may lead to erroneous results. If an error occurs, the Ultrapyc will stop the measurement cycle and display the error code and a descriptive error message. The Ultrapyc messages will cycle between the error message and a message that tells the operator to press the **CLEAR** key to restart. Here is an example of a low-pressure error condition that occurred when the pressure tank was disconnected.

```
Error 2 occurred
  Low Pressure
```

NOTE! Error detection for codes 3 & 4 is disabled when a preset equilibration is selected. Error 8 is a failure of the clock calendar circuit. This will be displayed in a printout but will not affect the results of the analysis.

```
Error 2 occurred
Restart: Press clear
```

Table G-1 describes the different error messages and some of their possible causes.

Table G-1, Error Codes

ERROR	DESCRIPTION	POSSIBLE CAUSES
1	Pressure unstable with system isolated from ambient	A, B, D
2	Low pressure input. Cell pressure less than 75 % of target pressure after 1.5 minute pressurization	C, D, E, F, G, H
3	Pressure unstable with V_A isolated and system pressurized	A, B, C, D
4	Pressure unstable with V_A "IN" and system pressurized	A, B, C, D
5	Pressure A # Pressure B	C, D, F, G
6	Unable to build pressure for purge (Pulse Mode)	C, D, E, F, G, H
7	Pressure unstable with system open to ambient	A, B, D
8	On-board clock failure	Electronic
9	Invalid volume	I
10	Divide by zero error	F, G
11	Hardware error	Electronic
12	Calculation error	I
13	Network configuration error	J
14	Serial port error	K
15	Serial port timeout	L
17	Calibration file error	M

A - Unstable pressure transducer output
B - Highly volatile impurities on sample
C - Sample cell not properly sealed
D - Leak in system
E - Low input pressure
F - No gas input
G - Gas input valve off
H - Flow control valve set too low
I - Negative volume calculated
J – Network address not valid
K – Serial port could not be configured with user-supplied settings
L – Weight update from digital balance did not occur within the specified timeout.
M – The temperature or pressure transducer calibration file is missing or corrupt.

H. PycWeb COMPUTER INTERFACE

1 Introduction

The Ultrapyc has a small web server running on it. A user can connect to the Ultrapyc web server from a networked computer using a web browser. Web servers and web browsers communicate using a standard protocol called HTTP. Since the Ultrapyc adheres to the HTTP protocol, no special software is required. Because a web browser will communicate with the Ultrapyc web server in the same way that a web browser can be used to surf the Internet, virtually any modern web browser will work. The web pages hosted on the Ultrapyc, called PycWeb, can be used to view reports, view the Ultrapyc User Manual, view current runtime data, and control the Ultrapyc.

The three web browsers tested for compatibility with the Ultrapyc are: Microsoft Internet Explorer, Mozilla Firefox, Google Chrome, and Apple Safari. Mozilla Firefox runs on Microsoft Windows or Linux and can be downloaded from www.mozilla.com. The Apple Safari web browser runs on the Mac OS or Windows and can be downloaded from www.apple.com/safari/download.

Section D.4.2, "Network Configuration" contains detailed information on connecting the Ultrapyc to a computer network or connecting it directly to another computer's network port. It also describes the steps necessary for setting the Ultrapyc network address. Appendix 6, "Computer Network Address Configuration Help" has information about how to set a computers network address when using the Microsoft Windows operating system or the Linux operating system.

2 Establishing a Connection

To connect to PycWin, type the instrument's IP address into the web browser followed by "/pyc". For example, if the IP address of the Ultrapyc were 192.168.0.173, the user would type this URL into the web browser's URL window: http://192.168.0.173/pyc.

The instrument's IP address must be set and read at the instrument. The following sequence can be used to determine the Ultrapyc's network address:
Main Menu → 3-System Settings→ 2-Network Configuration → 1-Display IP address

To input an IP address the following sequence can be used:

Main Menu → 3-System Settings→ 2-Network Configuration → 2-Set Static address

When setting the instrument's static address, the instrument will request both an IP address and a subnet mask. The standard subnet mask is 255.255.255.0, but this can be set differently depending on your specific situation.

NOTE! The following pictures are screen captures of a PycWeb session using Microsoft Internet Explorer. The PycWeb features described below will function similarly on browsers Mozilla Firefox and Apple Safari.

The browser will ask for a user name and password. Enter username "pyc" and password "pyc":

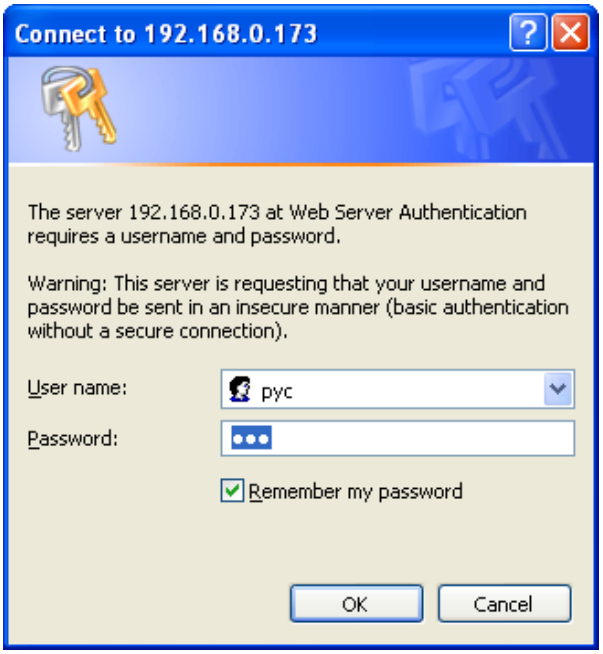

Figure H-1, Logging Onto The Pycnometer

After entering your username and password, select "OK". PycWeb should now launch automatically to the PycWeb home page.

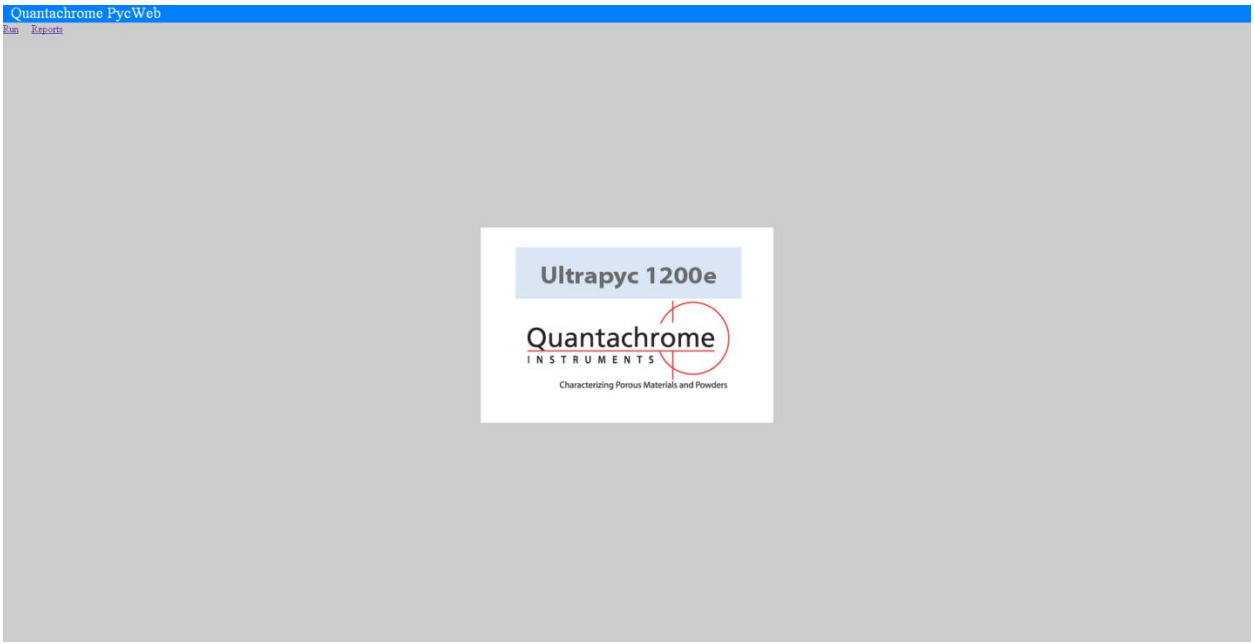

Figure H-2, "PycWeb" Home Page

3 Ultrapyc Web Pages

The Ultrapyc home page (index.html) has two links “Run” and “Reports”.

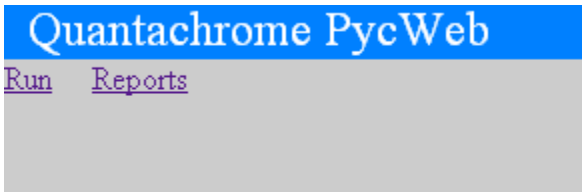

Figure H-3, Links On Pycweb Home Page

3.1 Run

The “Run” page is used to operate the pycnometer remotely. Selecting “Run” from the home page will launch the three-pane “Run” page. On the top pane is a form (“Run Parameters”) that can be used to set the Ultrapyc run parameters. On the lower left pane is a virtual keypad that can be used to run the Ultrapyc in the same way that the user would use the real keypad on the instrument. The lower right pane shows the current message displayed on the Ultrapyc’s two-line LCD display as well as the Ultrapyc’s valve status (green is open and red is closed).

Across the top of the “Run” page are five links: Run, Sample, Instrument, Parameter Files, and Home.

RUN - The “Run” page allows the user to input analysis specific information such as gas type, target pressure, maximum number of runs, and the run deviation (Figure H-4, Run Page Allows Remote Control Of Pycnometer Using the Run Parameters form, the user can very quickly set all the parameters necessary for a Ultrapyc Run cycle or calibration.

SAMPLE - The “Sample” link launches the sample information page (Figure H-9, Setting Sample Parameters). The sample information page is where the user will input the sample name and sample weight before the start of the run.

INSTRUMENT – Selecting “Instrument” launches the Instrument page which allows the user to create instrument configuration files. The Instrument page also brings the E-MAIL link to the top header. Selecting the E-MAIL link launches the E-mail Parameters page which allows the user to send reports from the Ultrapyc to an e-mail address on the local network.

PARAMETER FILES - The “Parameter Files” link will take the user to a page that allows the user to load the parameter information from previously stored configuration files (Figure H-13, Saving Configuration Files).

HOME - The home link directs the user back to the Ultrapyc home page.

The Ultrapyc can be operated in manual mode by selecting option 7-Manual Mode from the Ultrapyc Main Menu (shown through PycWeb on the Line Display of the “Run” page) using the key pad in the lower right pane. Once in manual mode the instrument’s manual mode display can

be viewed in the lower the left pane by selecting the “Manual Mode” link on the lower left keypad pane. Selecting “Manual Mode” in the lower left pane also brings up an alternative manual mode keypad (Figure H-5, Manual Mode Display) that sits below the manual mode display. It may be necessary to increase the size of the lower left pane, by adjusting the height, to view both the manual mode display and the manual mode keypad simultaneously. Clicking on the “Keys” link in the lower left pane will return the user to the conventional (but still virtual) keypad.

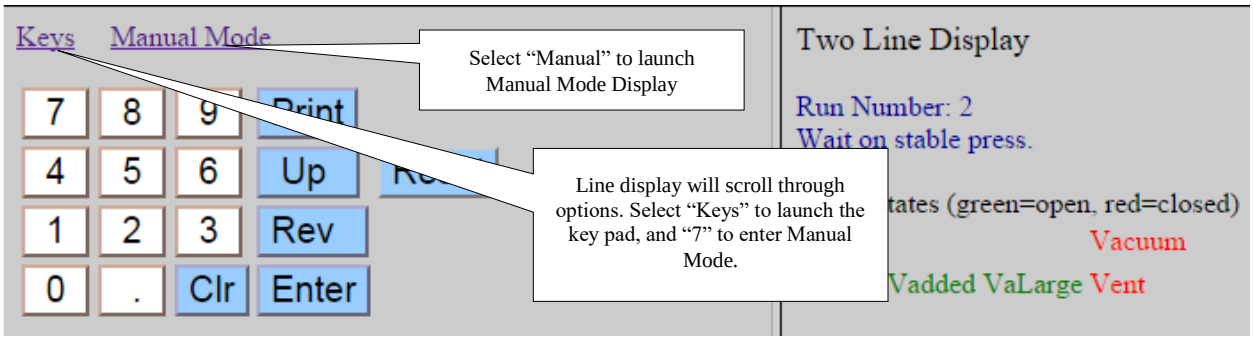

Figure H-4, Run Page Allows Remote Control Of Pycnometer

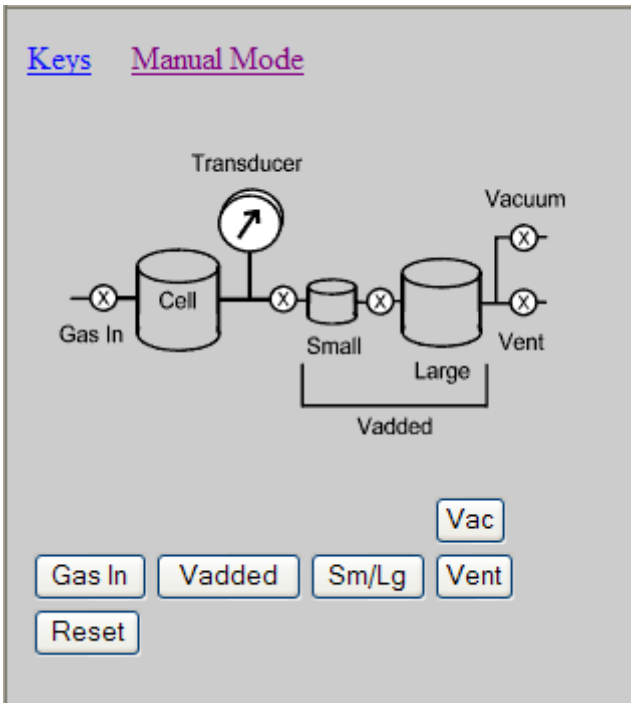

Figure H-5, Manual Mode Display

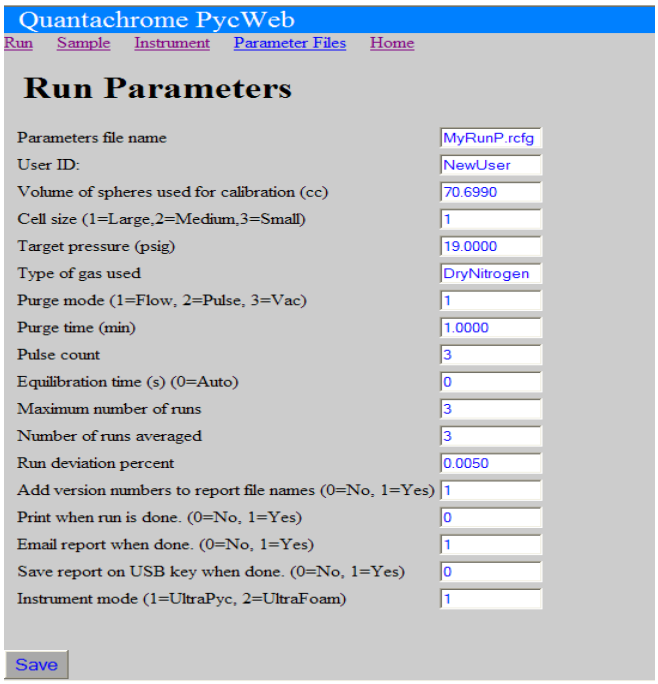

Figure H-6, Setting Run Parameters

NOTE! Name fields of the Run Parameters form should contain only numerals and letters. Spaces and special characters should not be used. The name fields of the Run Parameters form are Parameter File Name, User ID, and Type of Gas Used.

3.1.1 Run Parameters

The "Run Parameters" form contains every run parameter that can be set on the Ultrapyc, but that does not mean that every parameter needs to be set. For instance if the "Purge Mode" is set to pulse (2-Pulse) then "pulse count" needs to be set while the parameter "purge time" does not need to be set. Conversely, if "Purge Mode" is set to flow (1-Flow) then the "purge time" needs to be set while the "pulse count" parameter does not. The parameters on the form will be sent to the Ultrapyc, and the Ultrapyc will use these parameters when the measurement run occurs. To save the run parameters to the instrument select the "Save" button at the bottom of the form. The run parameters will be saved in the .rcfg format to a file with the name given in the "Parameters file name" field. To load a .rcfg file the user must first open the "Parameter Files" page by selecting the "Parameter Files" link at the top of the PycWeb "Run" page. After selecting the "Parameter Files" link scroll to the bottom of the page and enter the name of the .rcfg file the user would like to load by copying the .rcfg file from the list and pasting the file name into the field which reads "Enter file name to load:" (see Figure H-7, Loading Configuration Files). After the user enters the file name, select the "Load" button below. When the .rcfg file has successfully loaded, a new page will open verifying that the file was loaded correctly (see Figure H-8, Loaded Configuration File). After receiving this message the "Run Page" will have the parameters established by the file. These parameters can be altered before the start of the analysis if desired.

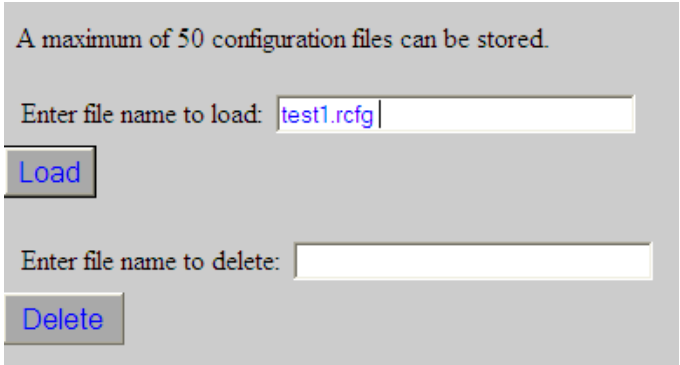

Figure H-7, Loading Configuration Files

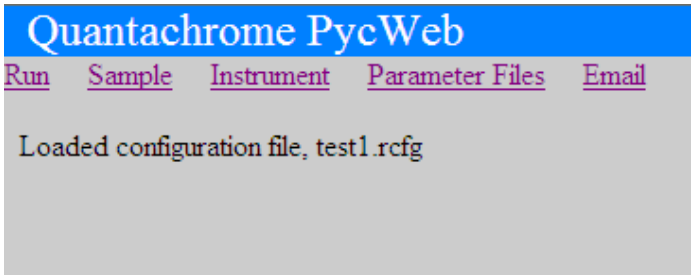

Figure H-8, Loaded Configuration File

Note that the instrument is able to save a maximum of fifty .rcfg files. It may be necessary to delete .rcfg files from the machine once at capacity. To delete a .rcfg file copy and paste the .rcfg file into the dialogue box that reads "Enter file name to delete" and select the "Delete" button below (see Figure H-7, Loading Configuration Files).

3.1.2 Sample Parameters

After completing the "Run Parameters" form, the next step in setting up the analysis is to complete the "Sample Parameters" form. To access the "Sample Parameters" form select the "Sample" link at the top of the "Run Parameters" page; this will open the "Sample Parameters" form (Figure H-9, Setting Sample Parameters). Name the parameter file using only alpha-numeric characters and do not use spaces. The parameters on the "Sample Parameters" form can be set in the same way that parameters were set on the "Run Parameters" form. Select "Save" below the form to save the parameters to the instrument. The ".scfg" extension is used to identify sample configuration files. These files can be loaded for reuse from the "Parameter Files" page using the same method outlined above (see Figure H-7, Loading Configuration Files).

Keep in mind that the Sample ID becomes part of the measurement results report file name. Because the "Parameter file name" and "Sample ID" are file names, it is necessary to avoid the use of any non-alphanumeric characters and spaces in these identifications.

After entering all of the run and sample parameters necessary to begin the run using the "Run Parameters" and "Sample Parameters" forms, the run can be started by using the virtual keypad in this sequence: **Main Menu → 1-Run → 3 - Start**. Once started the user can monitor the run from their computer web browser, and view, print or save the report from their computer when the run is complete.

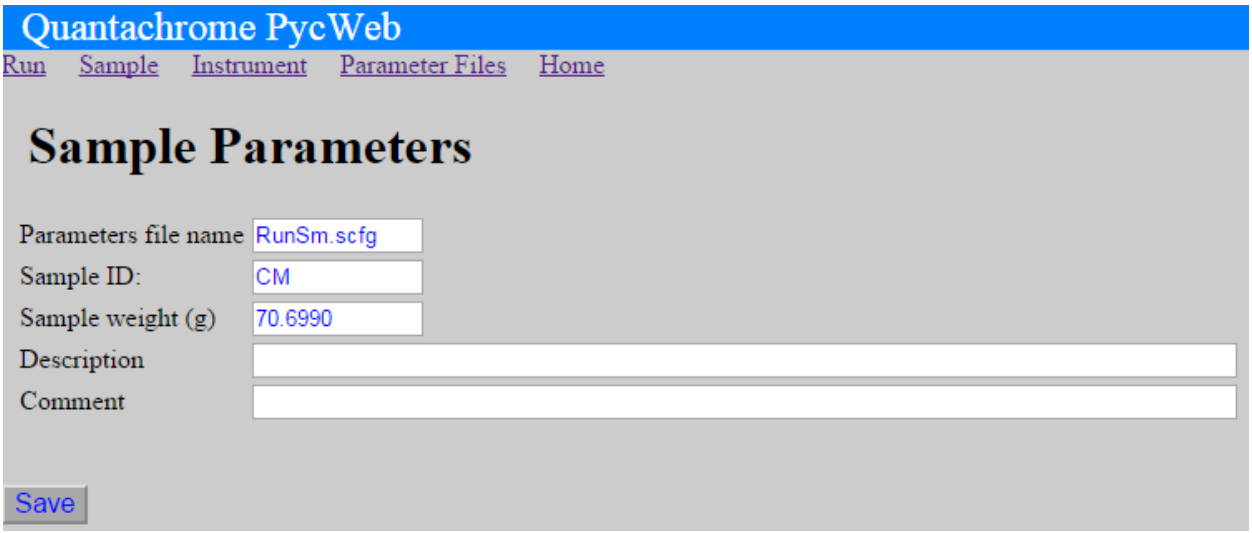

Figure H-9, Setting Sample Parameters

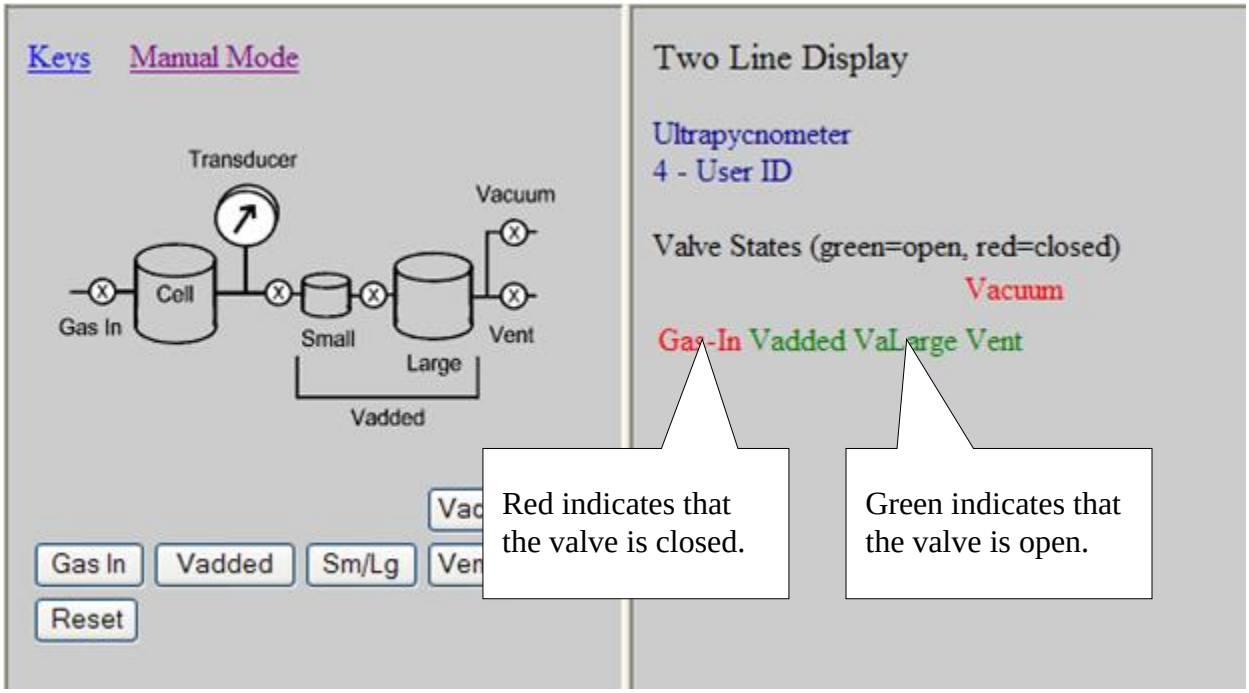

Figure H-10, Viewing Valve States

3.1.3 Instrument Parameters

To adjust Instrument Parameters or to access the Email function, click on the "Instrument" link at the top of the "Run" page. This will open up the "Instrument Parameters" form. If the chosen parameters file name does not end with the extension ".icfg" the Ultrapyc will append a ".icfg" extension to the end of the parameter file name. These files can be loaded for reuse from the "Parameter Files" page. Use only alphanumeric characters when setting the Parameter file name. Do not use spaces or any non-alphanumeric characters.

The top of the "Instrument Parameters" page has an additional link: "Email". Click on this link to display the "Email Parameters" page (Figure H-12, Setting Email Parameters). If the Ultraapyc is attached to a local computer network that has a mail server running, reports can be sent from the Ultrapyc to the email address on the local network as specified in this form. If the pycnometer reporting option has been selected (see section D.7.1.6) the reports are emailed when a run finishes making the email feature useful for run completion notification. Do not use this feature to attempt to send emails over a public network or the internet. *Consult your IT department before proceeding*. Enter the email server address and the target email address as shown in Figure H-12, Setting Email Parameters. This feature is not intended to support all keyboard characters and cannot be guaranteed to work with characters other than Roman alphabet (a-z), Arabic numerals (0-9) and period (dot). Click "Save" after setting the email parameter fields, then return to the "Run Parameters" page (Figure H-6, Setting Run Parameters) and click "Save" there too to cause the instrument to reset itself with the new email address. Because of the type of email server required, not all users will be able to use the email function.

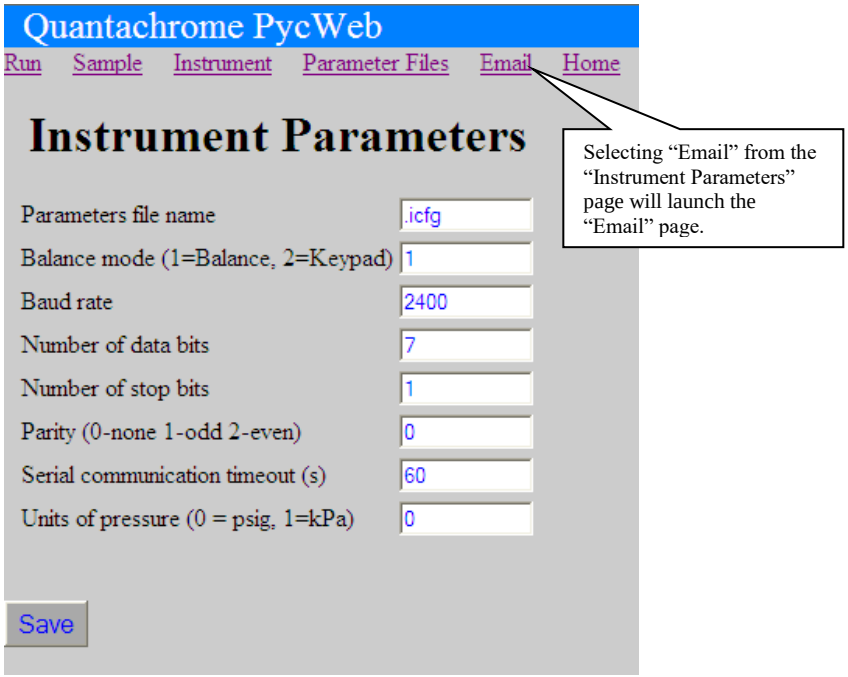

Figure H-11, Instrument Parameters

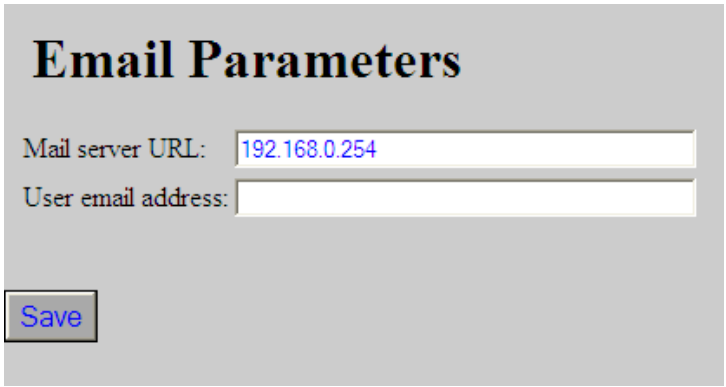

Figure H-12, Setting Email Parameters

3.1.4 Parameter Files

To re-use "Sample" and "Run Parameters" click on the "Parameter Files" link at the top of the "Run" page. The "Parameter Files" page shows a list of stored configuration files (see Figure H-13, Saving Configuration Files) where the file type .scfg holds sample parameters, .icfg instrument configurations, and .rcfg run (analysis) parameters. To recall parameters saved copy the file name from the "Stored configuration files" list, paste the file name into the field "Enter file name to load", and click on the "Load" button below the field. Then click on the "Run", "Sample" or "Instrument" link at the top of the page to see the recalled parameters loaded into the relevant parameter sets. The user must then click "Save" on the "Run Parameters" page to force the pycnometer to use the recalled and loaded parameters.

Files can be deleted by copying and pasting the file name into the "Enter file name to delete" form field and clicking the "Delete" button.

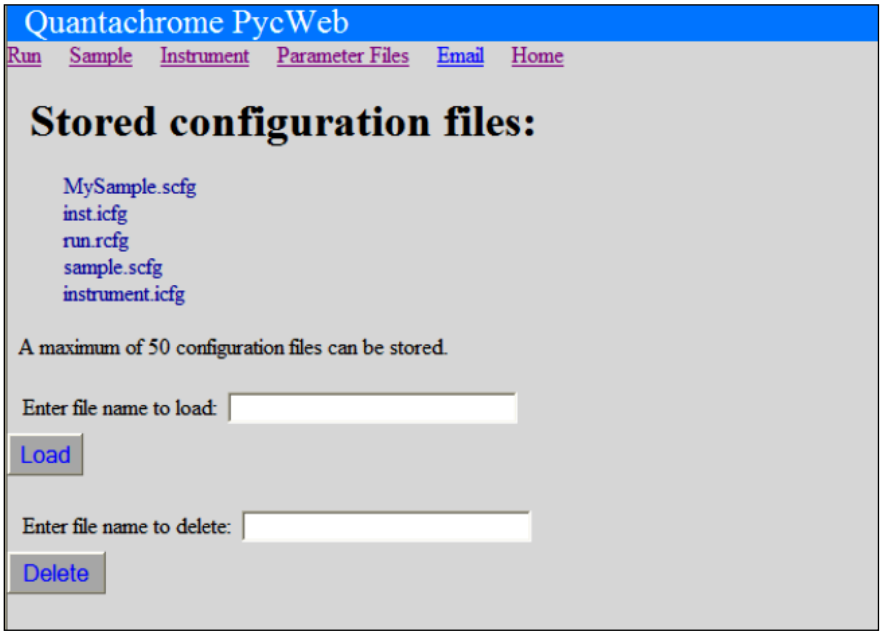

Figure H-13, Saving Configuration Files

3.2 Reports

Clicking on the reports link will show the user the reports stored on the Ultrapyc. There are two file types available, .txt and .pdf. The difference between the two files is presentation. The Reports tab is organized alphabetically, starting with the analysis type. Calibration runs are listed as "Va" or "Vc" reports. Foam runs will list with "foamReport" before the given sample identification (entered at the start of the analysis), and standard pycnometer runs will list with "ultraReport" before the given sample identification (see Figure H-14, Viewing List Of Reports). When the report link is double clicked the sample report will open for viewing (see Figure H-15, Sample Report).

Index of /

Name	Size	Date Modified
CompanyLogo.eps	201 kB	1/15/16, 3:41:00 PM
LeakTestReport-1.txt	365 B	9/10/15, 2:59:00 PM
foamReportCell5-last5.pdf	30.4 kB	12/15/15, 12:30:00 PM
foamReportCell5-last5.txt	1.8 kB	12/15/15, 12:29:00 PM
foamReportCell5-unc5.pdf	29.5 kB	12/15/15, 5:44:00 PM
foamReportCell5-unc5.txt	1.8 kB	12/15/15, 5:44:00 PM
foamReportCell5-wo.pdf	29.6 kB	12/16/15, 9:42:00 AM
foamReportCell5-wo.txt	1.8 kB	12/16/15, 9:41:00 AM
pentaReport001-1-1.pdf	29.2 kB	12/16/15, 5:43:00 PM
pentaReport001-1-1.txt	1.4 kB	12/16/15, 5:43:00 PM
pentaReport001-1-2.pdf	29.2 kB	12/17/15, 10:08:00 AM
pentaReport001-1-2.txt	1.4 kB	12/17/15, 10:08:00 AM
pentaReport001-1-3.pdf	29.2 kB	12/17/15, 2:25:00 PM
pentaReport001-1-3.txt	1.4 kB	12/17/15, 2:25:00 PM
pentaReport001-1.pdf	29.8 kB	12/16/15, 2:28:00 PM
pentaReport001-1.txt	1.8 kB	12/16/15, 2:28:00 PM
pentaReport002-2-1.pdf	29.2 kB	12/16/15, 5:51:00 PM

Figure H-14, Viewing List Of Reports

QUANTACHROME CORPORATION
Upyc 1200e V5.06
Analysis Report

Wed Aug 31 01:46:38 2016
User ID: 1881

Sample Parameters
Sample ID: LRGRUN
Weight: 70.6990 g
Description:
Comment:
Analysis Parameters
Cell Size - Large
V Added - Large: 81.1761 cc
V Cell: 150.0174 cc
Analysis Temperature: 23.8 C
Target Pressure: 19.0 psig
Type of gas used: HELIUM
Equilibration Time: Auto
Flow Purge: 1.0 min.
Maximum Runs: 15
Number Of Runs Averaged: 3
Deviation Requested: 0.0050 %
Analysis Results
Deviation Achieved: 0.0025 %
Average Volume: 70.7128 cc
Volume Std. Dev.: 0.0021 cc
Average Density: 0.9998 g/cc
Density Std. Dev.: 0.0000 g/cc
Coefficient of Variation: 0.0030 %

Run Data

RUN	VOLUME (cc)	DENSITY (g/cc)
1	70.7101	0.9998
2	70.7130	0.9998
3	70.7154	0.9998

Figure H-15, Sample Report

The file can be saved to the computer by right clicking the extension and saving the file to the chosen location or by copying the file from the FTP site. Copying files from the FTP site (Figure H-18, FTP Site) can work more quickly because a large quantity of files can be copied and saved in one step. To launch the FTP site select “View” from the browser’s tool bar, and from the “View” drop down menu select “Open FTP site…” (Figure H-16, Launching FTP Site from “View” Drop Down Menu). A log on window will open (Figure H-17, Log On - FTP Site)

requesting a user name and password, these will be the same username and password that are used when launching PycWeb initially (both are set to “pyc” by factory settings).

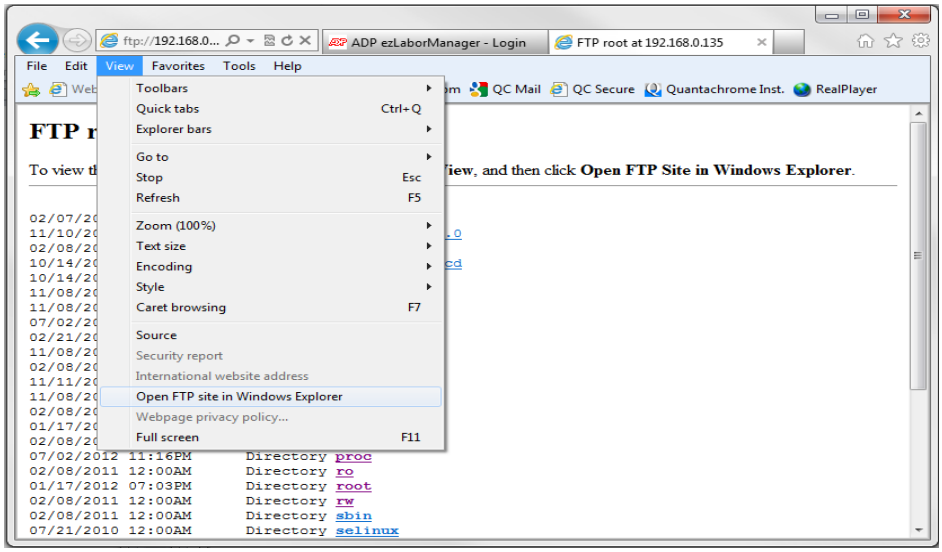

H-16, Launching FTP Site from “View” Drop Down Menu

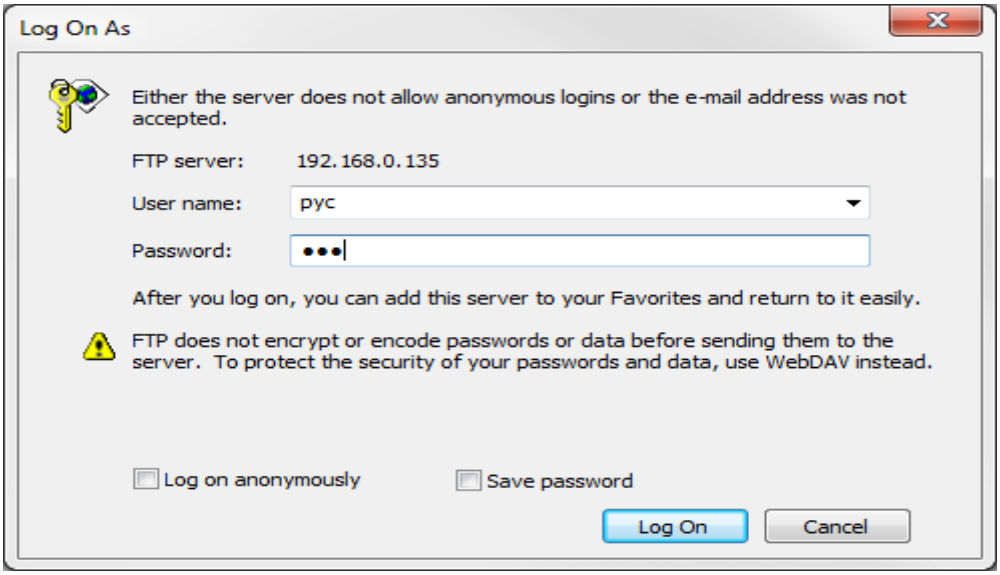

H-17, Log On - FTP Site

NOTE! Enter “pyc” for user name and “pyc” for password then click “Log On”.

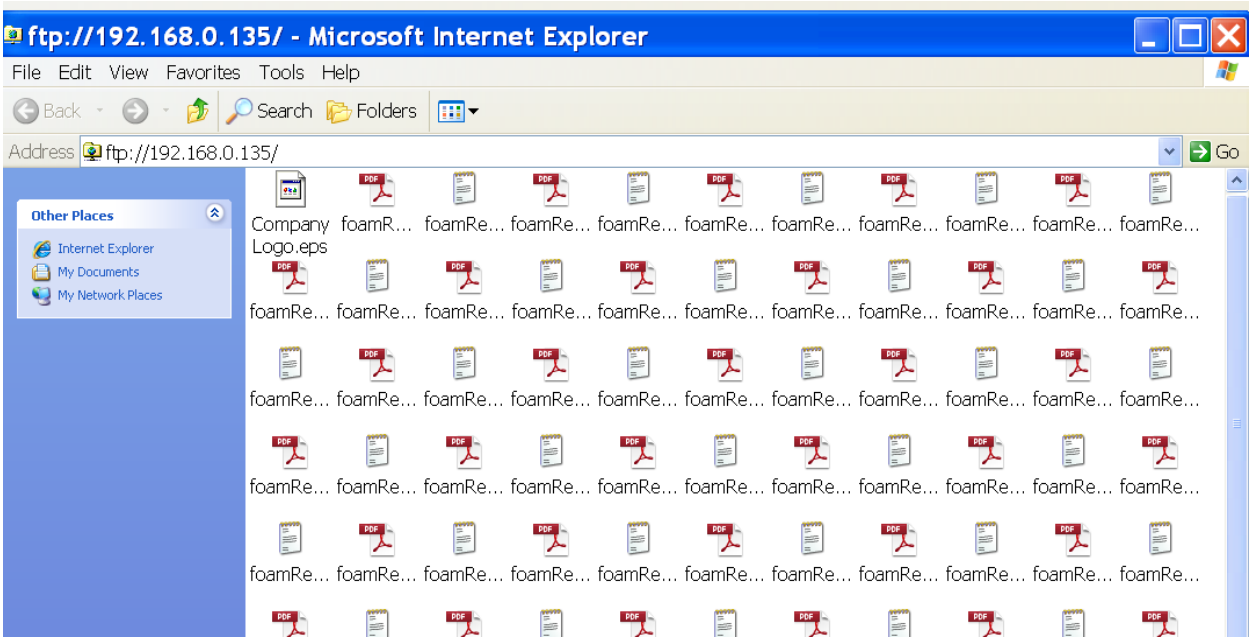

H-18, FTP Site

4 Sample Measurement Run Using PycWeb

A typical sample measurement session might be:

1. Open up a web browser and connect to the Ultrapyc Home page.
2. Open the Run Parameters page. Set all run parameters that pertain to the measurement run. Click the save button.
3. Open the Sample Parameters page to set the sample ID and sample weight. Click the save button.
4. Using the virtual keypad select sequence **Main Menu → 1-Run → 3-Start**. Keep the browser open full screen on reduced in the corner of the computer screen. The user can monitor the run status while simultaneously using other programs.
5. When the run is complete navigate the browser back to the Homepage and open the Reports link. Double click on the newly generated report file. Use the "save as" feature of the browser to store a copy of the report on the computer hard drive or network.
6. Import the data into the report.

5 Browser's Refresh Button

Occasionally the automatic refresh feature on the lower right panel of the "Run" pages gets out of sync. If the user notices a blank display in the lower right panel, restore the display by hitting the browsers refresh key. Using the keyboard, the refresh key for most browsers is F5.

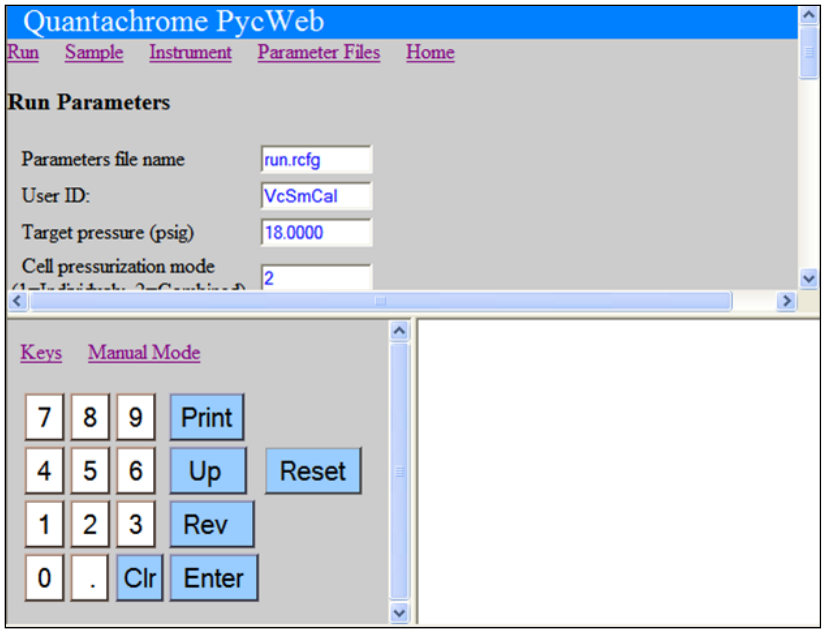

Figure H-19, Blank Status Display Panel

6 PycWeb Foam Extension

6.1 Extended Run Parameters (Foam Mode)

If your Ultrapyc supports the optional UltraFoam mode, the PycWeb "Run Parameters" web page will have an additional variable named "Instrument Mode." The instrument-mode variable can be set to **1** for Ultrapyc mode or **2** for UltraFoam mode. UltraFoam mode is used for measuring volumetric properties of cellular polymers (foams). The instrument mode can also be set using the keypad sequence: **Main Menu → 9 – Choose Instrument**.

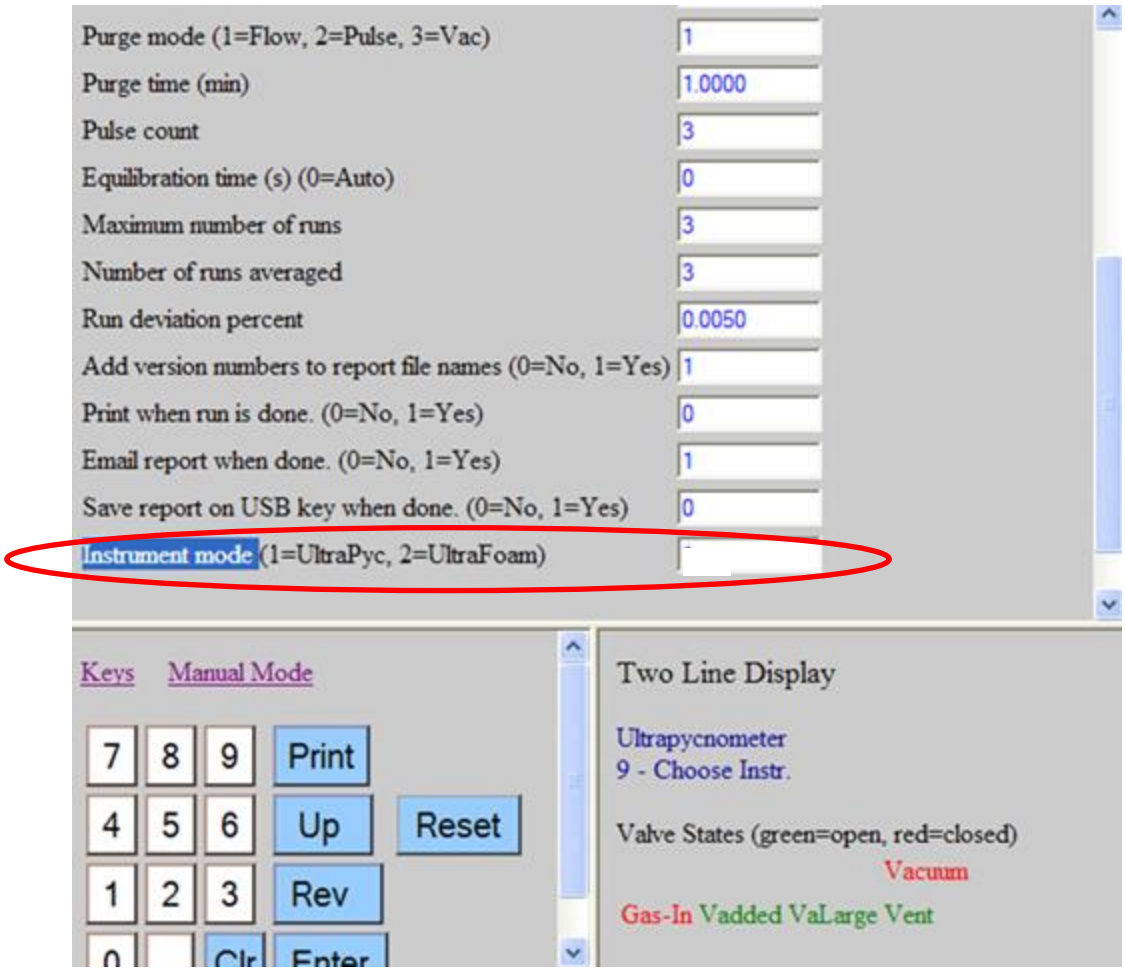

Figure H-20, Selecting Foam Operation

If you change the instrument mode from 1 to 2 and the Run Parameters save button is pushed, an update of the Run Parameters page will contain the additional foam parameters. The foam mode "Run Procedure" can be set to uncorrected, corrected, compressibility or cell fracture. When using the compressibility or cell fracture procedures, the "Incremental pressure," "Lower pressure limit," and "Upper pressure limit" values need to be set. When using the cell fracture procedure the "Maximum cell fracture" value must be set. When using the compressibility procedure the "Maximum compressibility" value needs to be set. When using uncorrected or corrected procedures ignore the additional parameters used for compressibility and cell fracture procedures.

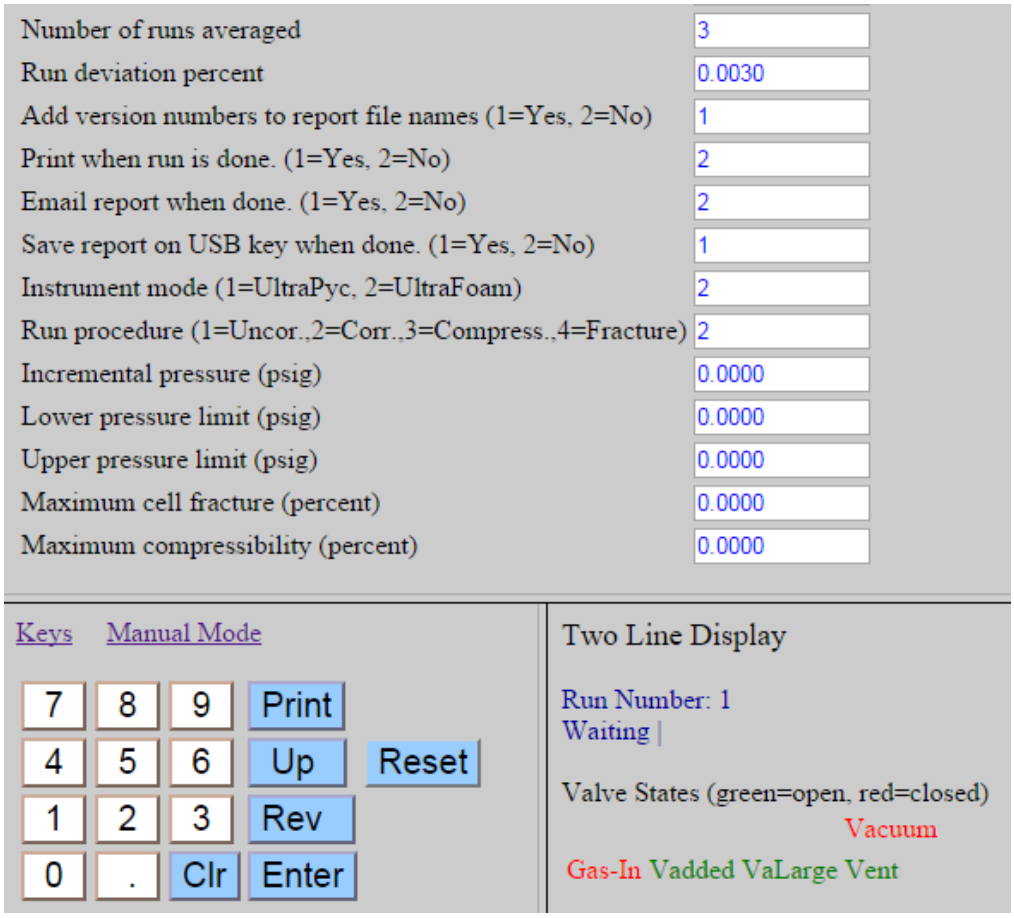

Figure H-21, Foam Parameters

6.2 Extended Sample Parameters (Foam Mode)

When in UltraFoam mode, the PycWeb "Sample Parameters" page will have an extended set of sample parameters. The Shape parameter can be set to 1 for cube, 2 for cylinder, or 3 to enter the volume manually. If a cube is the selected shape, the user must enter the cube height, width and length in centimeters. If a cylinder is selected enter cylinder height and diameter. If option "**3-Enter volume**" is selected the user must determine the volume of the foam sample manually in cubic centimeters (cc, cm^3) and enter the value in the "Manual entry foam volume" field. When the desired sample parameters have been entered, click on the save button at the bottom of the page.

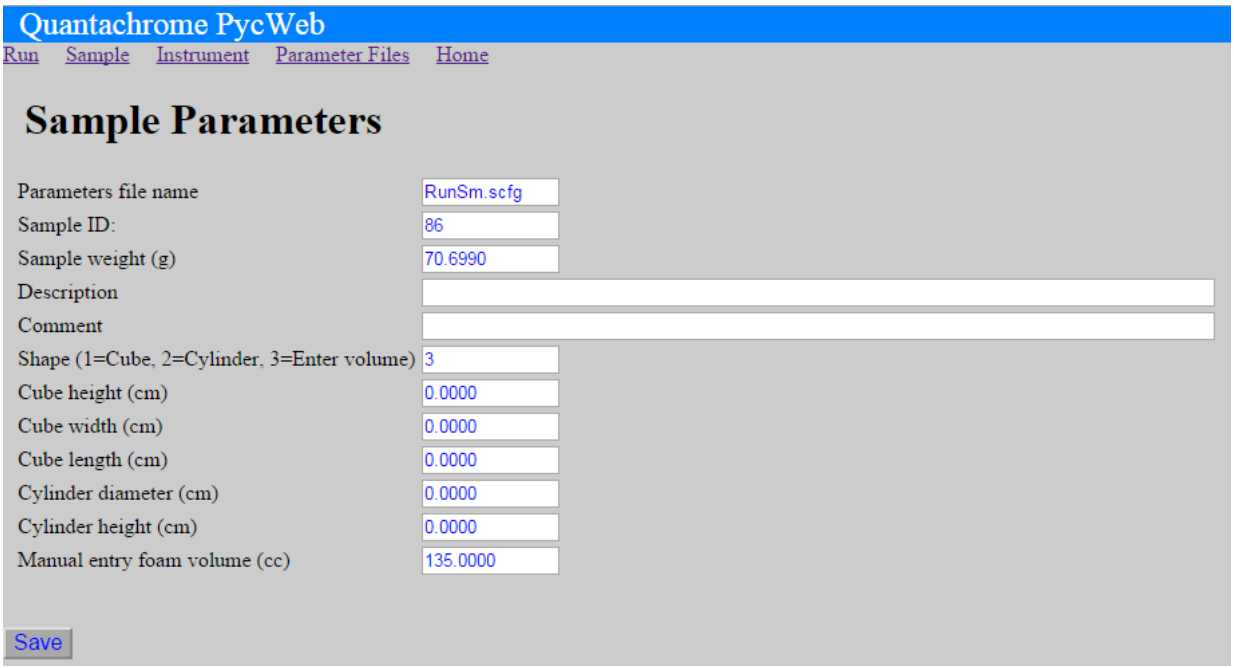

Figure H-22, Sample Parameters

6.3 Reports Extended Information (Foam Mode)

When a foam mode volume measurement cycle, completes the results are stored in a report file. The report file is stored in the Ultrapyc flash memory file system.

Section D.8 of this manual describes the naming conventions used when naming calibration report files, and Ultrapyc (non-Foam) report files. When operating in UltraFoam mode the foam report file base name is foamReport.txt and foamReport.pdf. The pycnometer can store hundreds of report files. In order to differentiate them the value of the sample ID field is appended to the pre-extension portion of the file name. For instance if the sample ID is ABSFoam, the results report filename will be foamReportABSFoam.txt and foamReportABSFoam.pdf.

If measurement runs are repeated using the same sample ID an additional numeric extension may be added. The option to add the additional numeric extension is set with the PycWeb Run Parameter web page field "Add version numbers to report file names." Alternatively, the option could be set using the keypad sequence **Main Menu → 3- System Settings → 6 – Number Report Files**. If numbering report files is selected and runs are repeated with the same sample ID then the report files will have a number added to the end of the sample ID. For example, the first run with sample ID ABSFoam will generate the report file foamReportABSFoam.txt(.pdf). The report file name for the second run with same sample ID will be foamReportABSFoam-1.txt(.pdf), and the third runs file name will be foamReportABSFoam-2.txt(.pdf).

If "Number Report Files" is not selected and there is more than one run using the same sample ID then only the last run's report will be saved. The latest run's report file will overwrite report files from previous runs that had the same sample ID.

I. THEORY

NOTE! Refer to the Flow Diagram of the Ultrapyc (see Section C.1.1).

By opening the solenoid valves to the sample cell, the system is brought to ambient pressure P_a after being purged with helium. The state of the system is then defined as:

$$P_a V_c = n R T_a \tag{I.1}$$

where n is the number of moles of gas occupying volume V_c (the empty, sealed sample cell volume) at P_a, R is the gas constant and T_a is ambient temperature in Kelvin.

When the solid sample of closed volume V_p is placed in the sample cell, Equation (I.1) can be written as:

$$P_a (V_c - V_p) = n_1 R T_a \tag{I.2}$$

When pressurized to some pressure above ambient, the state of the system is given by

$$P_2 (V_c - V_p) = n_2 R T_a \tag{I.3}$$

where P_2 indicates the pressure above ambient and n_2 represents the total number of moles of gas contained in the sample cell. When the solenoid valve opens to connect the added volume V_A to that of the cell, the pressure will fall to a lower value P_3 given by:

$$P_3 (V_c - V_p + V_A) = n_2 R T_a + n_A R T_a \tag{I.4}$$

where n_A is the number of moles of gas contained in the added volume when at ambient pressure.

The term $P_a V_A$ can be used in place of $n_A R T_a$ in Equation (I.4), yielding

$$P_3 (V_c - V_p + V_A) = n_2 R T_a + P_a V_A \tag{I.5}$$

Substituting $P_2 (V_c - V_p)$ from Equation (I.3) for $n_2 R T_a$ changes Equation (I.5) to:

$$P_3 (V_c - V_p + V_A) = P_2 (V_c - V_p) + P_a V_A \tag{I.6}$$

or:

$$(P_3 - P_2)(V_c - V_p) = (P_a - P_3) V_A \tag{I.7}$$

Then,

$$V_c - V_p = \frac{(P_a - P_3) V_A}{P_3 - P_2} \tag{I.8}$$

Equation (I.8) is further reduced by adding and subtracting P_a from P_3 and P_2 in the denominator, giving:

$$V_p = V_c - \frac{(P_a - P_3) V_A}{(P_3 - P_a) - (P_2 - P_a)} = V_c + \frac{V_A}{1 - \frac{P_2 - P_a}{P_3 - P_a}} \tag{I.9}$$

Since P_a is made to read zero, that is, all pressure measurements are relative to P_a, which is zeroed prior to pressurizing, Equation (I.9) becomes:

$$V_p = V_c + \frac{V_A}{1 - \left(P_2 / P_3\right)} \qquad \textbf{(I.10)}$$

Equation (I.10) is the working equation employed by the Ultrapyc/UltraFoam (i.e. the V_p is the measured volume of the sample and closed pores).

In the FOAM mode, the pycnometer calculates the percent open pore volume (O_C) by using Equation (I.11):

$$O_C = \frac{V_G - V_P}{V_G} \cdot 100 \qquad \textbf{(I.11)}$$

Where V_G is the geometric volume of the sample.

The instrument calibrates V_A by performing two pressurizations, once with the sample cell empty ($V_p = 0$; P'_2 and P'_3 correspond to pressures with sample cell empty) and once with the calibration sphere V_{cal} in the sample cell. Equation (I.10) for these two conditions can be rewritten as:

$$V_p = 0 = V_c - V_A \frac{1}{\left(P'_2 / P'_3\right) - 1} \qquad \textbf{(I.12)}$$

and

$$V_p = V_{cal} = V_c - V_A \frac{1}{\left(P_2 / P_3\right) - 1} \qquad \textbf{(I.13)}$$

Combining Equations (I.12) and (I.13) yields:

$$V_A = \frac{V_{cal}}{\dfrac{1}{\left(P'_2 / P'_3\right) - 1} - \dfrac{1}{\left(P_2 / P_3\right) - 1}} \qquad \textbf{(I.14)}$$

The instrument calibrates V_c for a cell containing the sample holder and the appropriate calibration spheres of volume V_{cal}. Equation (I.10) is used, which can be rewritten as:

$$V_p = V_{cal} = V_c + \frac{V_A}{1 - P_2 / P_3} \qquad \textbf{(I.15)}$$

or

$$V_c = V_{cal} + \frac{V_A}{\left(P_2 / P_3\right) - 1} \qquad \textbf{(I.16)}$$

J. APPENDICES

Appendix 1 Calibration Spheres

The table below shows the various spheres that are available for calibrating the instrument.

Table J-1, Calibration Spheres And Nominal Sizes

PART NUMBER	QTY IN SET (UPyc)§	QTY IN SET (Micro-UPyc)§	SIZE	DIAMETER (mm)	VOLUME (cm^3)
01500-NANO	Optional 1	1	-	5.556	0.0898
01500-MICRO	Optional 2	2	MICRO	12.7	1.0725
01500-SMALL	2	-	SMALL	23.8125	7.0699
01500-MEDIUM	1	-	MEDIUM	38.1	28.9583
01500-LARGE	1	-	LARGE	47.625	56.5592

NOTE! The large, medium, and small calibration spheres are also available with individually measured NIST traceable diameters.

Table J-2, Part Numbers For NIST Traceable Spheres

PART NUMBER	QTY IN SET
01500-NIST-SM	1
01500-NIST-LG	1
01500-MED-NIST	1

§ As supplied with the instrument.

Appendix 2 Operation with Temperature Control Option

Ultrapycs manufactured for use with the optional Temperature Control Capability have two open brass tubes projecting from the right side panel of the instrument. (Note: Ultrapycs without this option cannot be upgraded outside the factory). These two brass tubes are designed to be connected to the insulated tubing that carries a liquid at a controlled temperature into the instrument. Inside the instrument, the brass tubing coils around the various chambers of the instrument in order to ensure their temperature stability. The procedure listed below details the sequence of steps to setup the Pycnometer for constant temperature operation.

1. Place the circulator close to the right side of the instrument so that its insulated hoses can be attached to the two brass tubes projecting outwards from the right side panel of the Ultrapyc.
2. Attach the hoses securely to the brass tubes by means of adjustable clamps.

NOTE! Each hose can be connected to either brass port; their purpose is to continuously carry a liquid into and out of the instrument, irrespective of the direction of flow.

3. Refer to the circulator's operating manual to program it to the desired temperature. The temperature of the circulating liquid will be maintained constant within the limits specified in the circulator manual.

NOTE! Please ensure that all safety and operating procedures specified in the circulator manual are properly followed. For more detailed questions regarding the operation of the circulator, refer to Manufacturer Operation Manual (supplied with the unit).

Appendix 3 Balance Mode

Appendix 3.1 Compatible Output Format

A digital balance can be connected to the Ultrapyc serial port. A data stream containing weight information flows from the balance to the Ultrapyc through the serial port cable. The serial data output from a digital balance come in a wide variety of formats. The balance output stream is generally configurable (see your balance Manufacturer User Manual.). The Ultrapyc accepts a line of ASCII characters terminated by either a new line character or a carriage return character or both. When a terminated line of characters is received, the Ultrapyc searches the line for the **first occurrence** of an ASCII encoded floating-point number (Ex. 12.123) and accepts the number for the sample weight. The Ultrapyc expects the weight to be in grams. The sample weight is displayed if it is converted correctly. See Section D.7.2.1, Set the Sample Weight, for details on how sample weight is displayed on the Ultrapyc.

Examples of *compatible* formats are:

10.223 grams

Weight = 10.223 g Time 10:22:33 Date 3/3/08

Examples of formats that are not compatible* are:

Temperature 25.0 C Weight 10.223 g

**Incompatible because temperature is the first floating point number.*

W 10223.0 milligrams

**Incompatible because the Ultrapyc expects the weight in grams.*

Appendix 3.2 Hardware Setup

Key in the Ultrapyc keypad sequence "Main Menu → `3-System Settings` → `3-Balance Mode`" to enter the Balance Mode submenu. The following is displayed.

```
     Input Weight From:
1 - Balance      2 - Keypad
```

Press the **2** key then press the **ENTER** key to use Keypad mode of weight entry. In this mode, the user must manually enter the value to be used as weight. The instrument will now return to the Main Menu.

NOTE! The user cannot manually enter a weight from the keypad while the instrument is in Balance Mode. If the balance is disconnected from the instrument, be sure to toggle the Balance Mode OFF.

By pressing **1**, the instrument will receive weight value through a serial communication link with a connected balance. The balance must be connected to the serial interface on the left side of the

Ultrapyc to use this mode. A cable for this purpose is supplied by the balance manufacturer although its connector may have to be replaced / rewired.**

The display will show the following menu:

```
Enter Baud Rate
Selected: 1200
```

To accept the baud rate shown, press the **ENTER** key or enter a new value then press the **ENTER** key.

NOTE! Acceptable values are: 1200, 1800, 2400, 4800, 9600, 19200, 38400.

Next, choose the correct number of stop bits:

```
1 or 2 Stop Bits?
Selected: 1
```

Press the **1** key to use one stop bit or press the **2** key to use two stop bits. Next, choose the correct parity:

```
Select Parity
0 - None  1 - Odd  2 - Even
```

Press the **0** key to use no parity, press the **1** key to use odd parity or press the **2** key to use even parity.

Next, choose the correct number of data bits:

```
7 or 8 Data Bits?
Selected: 7
```

Press the **7** key to use seven data bit or press the **8** key to use eight data bits.

Enter the time that the Ultrapyc will wait for the weight communication at the serial port. A typical time is 60 seconds.

** Balance manufacturers have not agreed upon a standard cable type or pin configuration.

```
Enter communication
    Timeout: 60
```

Upon entry of the timeout, the instrument will return to the Main Menu.

The Ultrapyc COMM port is wired exactly like a standard PC. If the digital balance and serial port cable is functional when attached to a PC COMM port, then the balance and cable should work when attached to the Ultrapyc COMM port.

It is possible that the balance cable needs to be rewired for correct operation. The user should consult your balance manual for specific details. In the event that a modification to the serial cable is necessary, the list below describes the functions assigned to the pins of the serial connector.

1-(Data Carrier Detect) 2-(Receive) 3-(Transmit) 4-(Data terminal ready) 5-(Ground)

6-(Data Set Ready) 7-(Request to Send) 8-(Clear to Send) 9-(Ring Indicator)

Appendix 4 Compatible Printers

The Ultrapyc is Linux based and many Hewlett-Packard (HP) printers are supported under Linux. The Ultrapyc can automatically configure itself to work with most of the HP printers via the **Add Printer** menu item. That said, the following is the list of HP printers, have been factory tested for compatibility with the Ultrapyc Firmware Version 5.*xx*:

HP Deskjet 1112
HP Deskjet 3000
HP Deskjet 3050A
HP Deskjet 3510
HP Deskjet 6940
HP Officejet 6100

Currently, as an accessory to the Ultrapyc/UltraFoam pycnometer, a compatible Hewlett-Packard (HP) printer can be purchased (P/N 38093) from Quantachrome, inquire for more details.

NOTE! Since printers are frequently discontinued by the manufacturer without notice, the exact printer model delivered by Quantachrome may vary. Any currently offered by Quantachrome optional printer model is factory validated to assure compatibility with the Ultrapyc.

NOTE! Only the printing function via a USB cable is supported by the Ultrapyc/UltraFoam pycnometers. Multifunction printer/scanner/fax machines will only print when attached to the Ultrapyc/UltraFoam pycnometers.

NOTE! A printer that does not successfully print out a test page upon pressing the **Add Printer** button will not work with the Ultrapyc/UltraFoam pycnometers.

NOTE! If printer ceases printing try adding it again using the Add Printer button in the System Configuration Menu.

Appendix 5 Calibration and Usage of the Nanocell (the Difference Method)

Any error in the calibration volume of the nanocell will be much more pronounced due to the small volume involved. The difference method provides a more accurate determination of sample volume. Although this procedure is listed for the nanocell, it may be adapted when using any size cell. Calibrate according to steps 1 & 2. Re-calibrate according to step 2, as necessary, just prior to analyzing a sample. Analyze the sample, and/or check the calibration, by performing Steps 3, 4 & 5.

1. Place the empty microcell into the sample chamber (standard Ultrapyc requires the Microsleeve). Perform a V_a (Large) calibration, if using the Micro-Ultrapyc or a V_a (Small) if using a standard Ultrapyc. Before starting the calibration, leave the microcell in the instrument for at least 10 minutes in order to achieve thermal equilibrium. After the instrument finishes the blank run, it will prompt the user to "Start Sphere Run." Before pressing **ENTER**, place the 2 microspheres into the instrument, close the cap, and wait another 10 minutes to allow the spheres to thermally equilibrate with the sample chamber. Proceed with the sphere run by pressing the **ENTER** button.
2. Calibrate V_c for the microcell. Calibrate V_c Large if using the Micro-Ultrapyc or V_c Small if using the standard Ultrapyc. Leave the microcell with the two microspheres in the sample chamber. Enter 2.145 cc (i.e. volume of two microspheres) as the cal volume.
3. To analyze the sample, or to check the calibration of the instrument, take the microcell out of the sample chamber using the lift-out tool and remove the microspheres. Fit the nanocell (P/N 04000-3707-M) inside the microcell. Place microcell / nanocell combination (empty) into the sample chamber and allow 10 minutes for thermal equilibration. Run (do not calibrate) this empty cell combination with the following parameters:

Cell: Large	
Runs To Avg:	5
Max Number of Runs:	9
% Deviation Requested:	100%††
Sample weight:	1.0000 g (even though no sample is in the cell)
Purge: Flow, 1 minute	

NOTE! For greatest accuracy, it is recommended to perform Step 3 at least 3 times in succession. Take the average of the values from Step 3. The result of this analysis (Step 3) is the physical volume occupied by the nanocell.

4. Place the sample (or nanosphere as the test sample) into the nanocell and repeat Step 3. Once again, for greatest accuracy perform Step 4 at least 3 times and take the average of the results.
5. Subtract the volume of the empty nanocell (Step 3) from the volume of the nanocell + sample/nanosphere (Step 4). If the user performed multiple measurements for Steps 3 and 4,

†† Selecting a requested deviation of 100% will force the instrument to take all nine measurements, regardless of the values of the sample volume for the individual measurements.

use the average values. The calculation gives the volume of the sample. When the nanosphere is measured this way, the result should yield 0.0898 cc with a maximum error no greater than 2 % (0.0018 cc) for the Micro-Ultrapyc.‡‡

‡‡ This error is typically in the range of circa 5 % when using the standard Ultrapyc.

Appendix 6 Computer Network Address Configuration

Appendix 6.1 Configuring a Microsoft Windows system

If the computer is running the Microsoft Windows operating system, open the network connections service from the Control Panel:

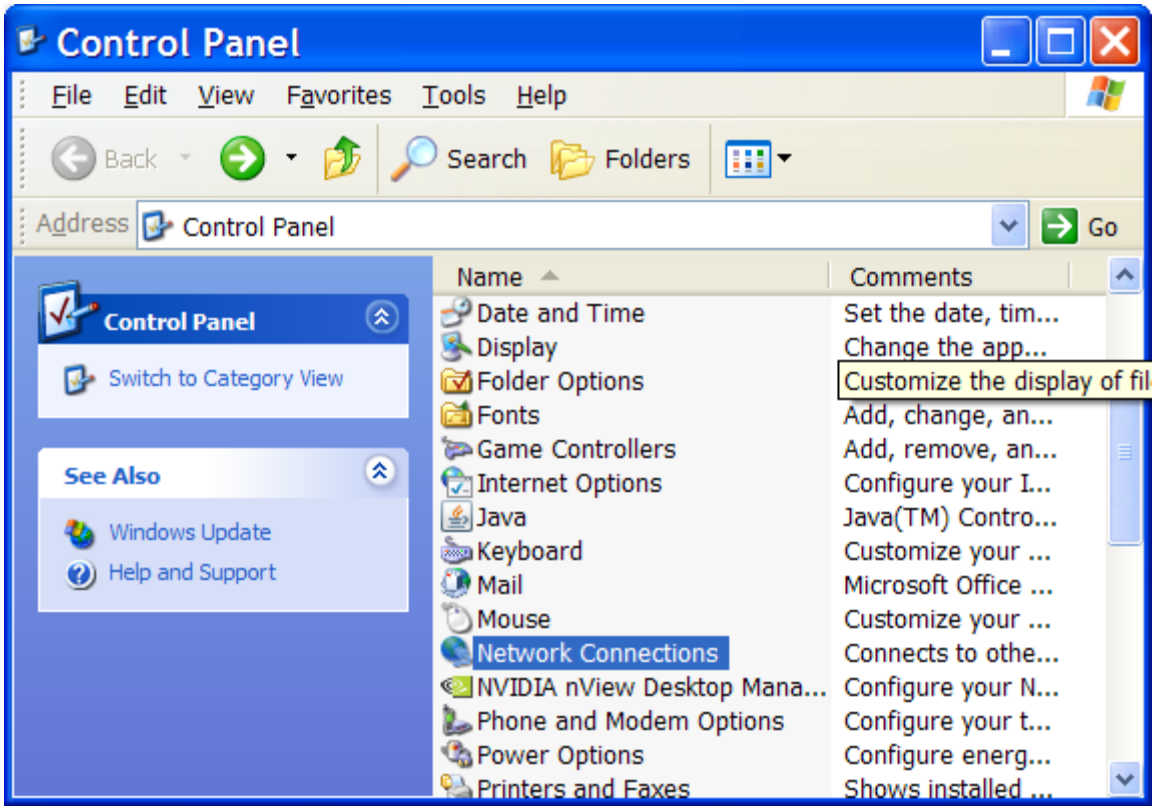

Figure J.1, Windows Control Panel, Some Versions Of Windows May Look Different

If the computer has a network card, the user will see its network in the list. Double click on it

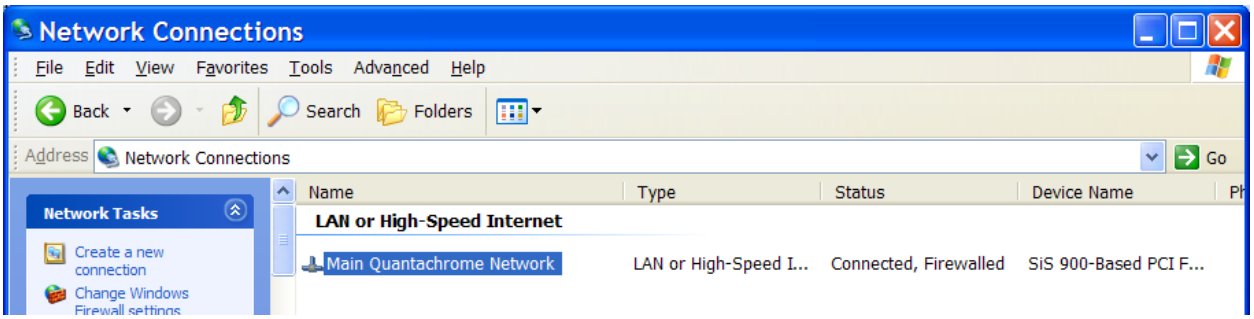

Figure J.2, Locating Network

Double clicking brings up the network connection dialog box:

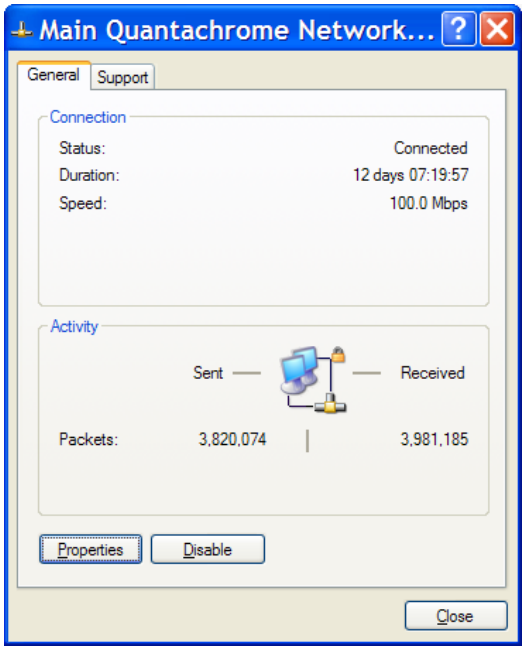

Figure J.3, Network Connection Dialog Box

Click on the "Properties" button.

Select "Internet Protocol (TCP/IP):

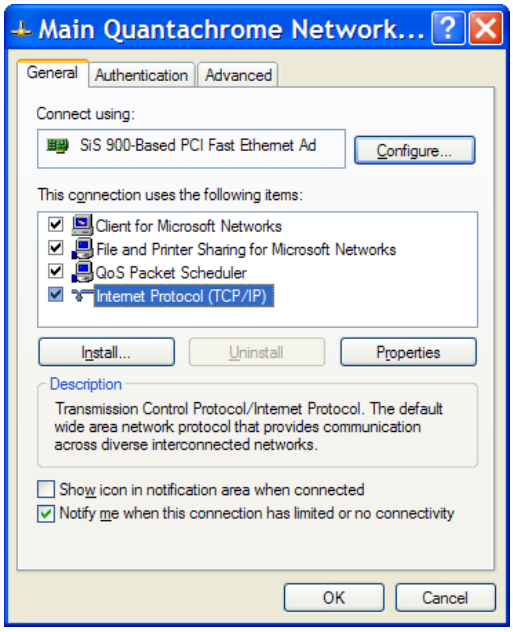

Figure J.4, Select Internet Protocol

Click on the "Properties" button.

Select the "Use the following IP address" check box and type in the desired IP address and network mask.

For example if directly connected to the Ultrapyc with a crossover Ethernet cable:

Ultrapyc IP address	192.168.0.2,	network mask	255.255.255.0.
Your Computer IP address	192.168.0.1,	network mask	255.255.255.0.

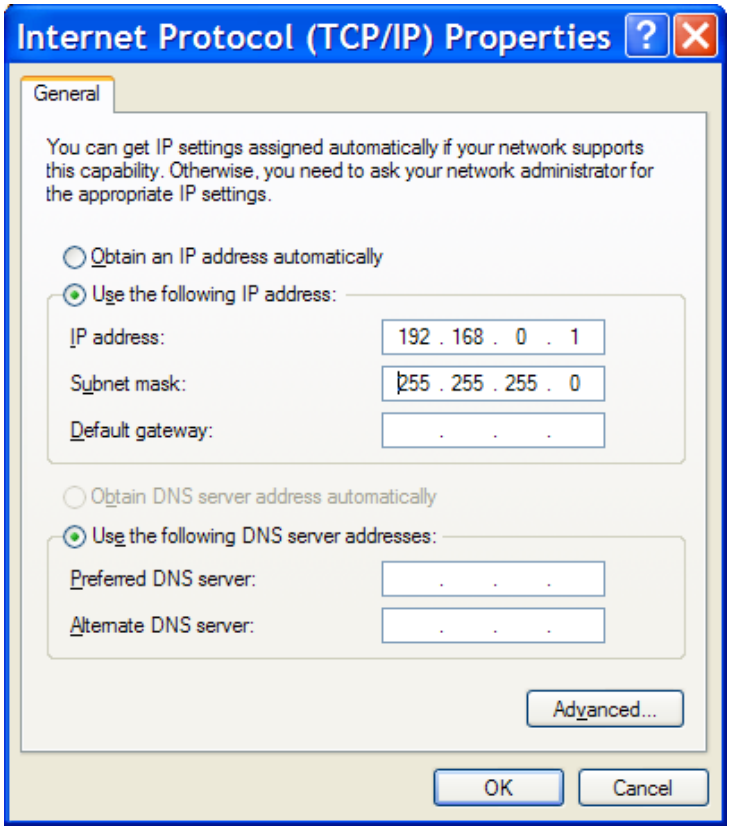

Figure J.5, Specifying IP Address And Subnet Mask

Click on the **OK** button to complete the configuration procedure.

Appendix 6.2 Configuring Network address on LINUX (or UNIX)

There is a lot of variability on graphical-user-interface methods of setting network addresses among the many desktop Linux distributions. A general method of setting the network address on Linux (or UNIX) is calling the “ifconfig” utility from a shell terminal. Open a terminal window then type “ifconfig.” If the computer has one network interface, it is probably called “eth0.” Some computers have more than one network card, in that case, the second interface will most likely be named “eth1.” If the computer has more than one Ethernet card, configure the interface that is connected to the Ultrapyc. In the screen grab below, the network was already configured, its IP address is 192.168.0.38, and its network mask is 255.255.255.0.

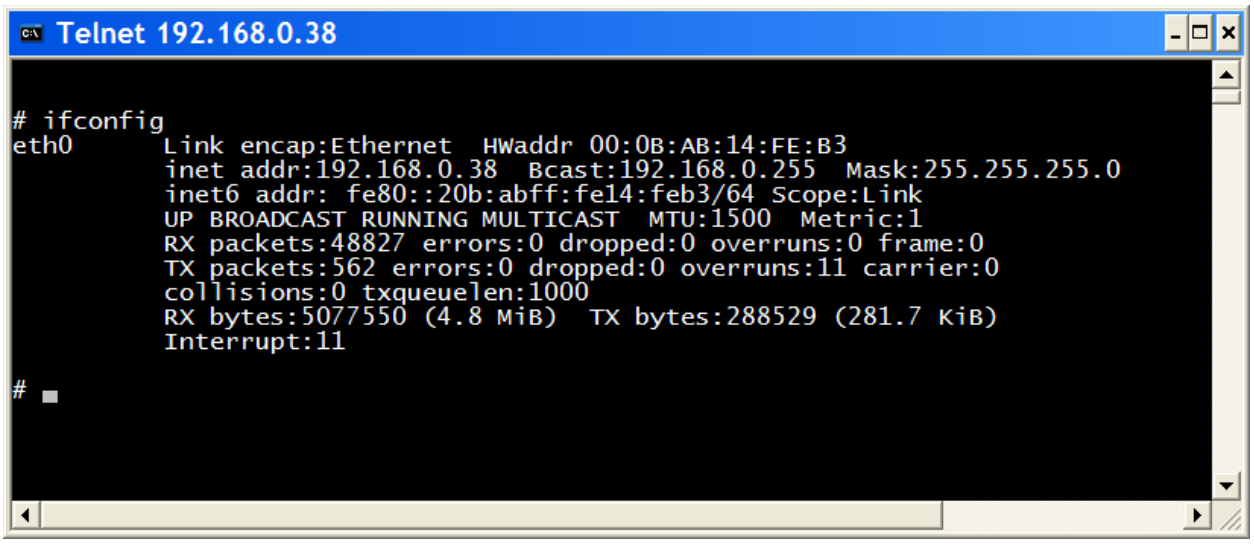

Figure J.6, Linux ifconfig Output

If the network interface has not been configured, ifconfig will not display any information.

To set the IP address and network mask type “ifconfig eth0 192.168.0.1 netmask 255.255.255.0 up”.

Type “ifconfig” again and information about the eth0 interface should be displayed as in the screen grab above, but with the new inet addr. There is some leeway in the range of IP addresses that could be used. The important thing is that each device on a network has a unique address. When making a direct connection between a computer workstation and the Ultrapyc using a crossover cable this combination of addresses will work fine:

Computer Workstation:	IP 192.168.0.1, network mask: 255.255.255.0.
Ultrapyc:	IP 192.168.0.2, network mask: 255.255.255.0.

Appendix 7 Report File Transfer and Firmware Update *via* FTP or *via* FileZilla

NOTE! If you experience any issues in this section, please contact Quantachrome Support at support-sp@anton-paar.com

The PYCNOMETER has a small file transfer protocol (FTP) server running on it. FTP is a prevalent standardized internet protocol used for file transfer. Because the Ultrapyc FTP server adheres to the standard protocol almost any FTP client can be used to transfer report files from the Ultrapyc to a remote computer. The web browser knows how to communicate with an FTP server too. In fact, when the user opens up the "Reports" link from the Ultrapyc home page (see Section H, PycWeb Computer Interface) it is connecting the browser to the Ultrapyc FTP server. Most computers running Microsoft Windows, Linux, or UNIX have FTP clients built in.

If the user prefers using an FTP client with a graphical-user interface, the user can install the open source FTP client called FileZilla on the computer. A version of FileZilla for the Microsoft Windows XP operating system is shipped on a CD included with the Ultrapyc. FileZilla can be downloaded from **www.filezilla-project.org.**

Additionally, the FTP command line or the FileZilla (i.e. FTP client with a graphical-user interface) can be used to update the Pycnometer's firmware, if necessary.

Appendix 7.1 Transferring Report Files

File Transfer *via* Command Line FTP

To download report files from the Ultrapyc using the command line ftp client on a Windows platform, open a cmd window and follow this example.

1. Facilitate a LAN connection (use Ethernet cable) between the Pycnometer and the computer.
2. First, click on Windows 

button (located in the right bottom corner of the computer screen). Locate option 

and click on it.
3. The Run window will open. Here, type-in the following command: "**cmd**" and click OK:

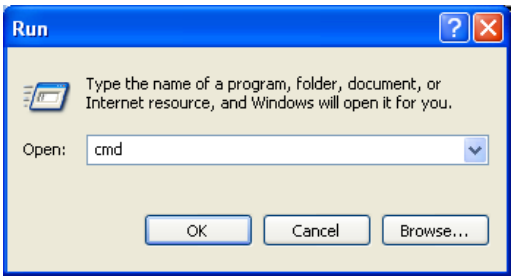

Figure J.7, Running A Command Shell

4. This will open the Windows command shell:
   In this example, the IP address of the Ultrapyc is 192.168.0.17. The user must use the actual IP address of the Pycnometer to properly facilitate an **ftp** session.

NOTE! If you do not know the Pycnometer's IP address, you can display it by using the following sequence from the instrument's keypad: Main Menu → `3-System Settings` → `2-Network Configuration`→ `1-Display IP Address` (see also Section D.3.3.1 **Network Menu,** of this manual).

NOTE! All commands below are listed in "quotation mark", when typing command characters, the quotation punctuations must be omitted. Example: for "**command**", type-in **command**. To execute a command, hit **ENTER** key (PC keyboard).

5. Open the **ftp session**, by typing-in the following command: "**ftp xxx.xxx.xxx.xxx**", where "xxx.xxx.xxx.xxx" stands for the IP address of the Pycnometer. Hit **ENTER** to execute the command.
6. After the ftp session is open, proceed with login. At the user prompt, type-in "**pyc**" (hit **ENTER** to execute). Similarly, at the password prompt, type "**pyc**" again (hit **ENTER** to execute). At this point, the user should be successfully logged in the ftp session.
7. Type in the FTP "**ls**" command to get a listing of report files. The FTP "**get**" command is used to get a copy of vaReport.txt. Please note that if both the .txt and the .pdf versions of the report are desired, they must be copied separately with separate "**get**" commands or a wildcard "*" used for the extension.

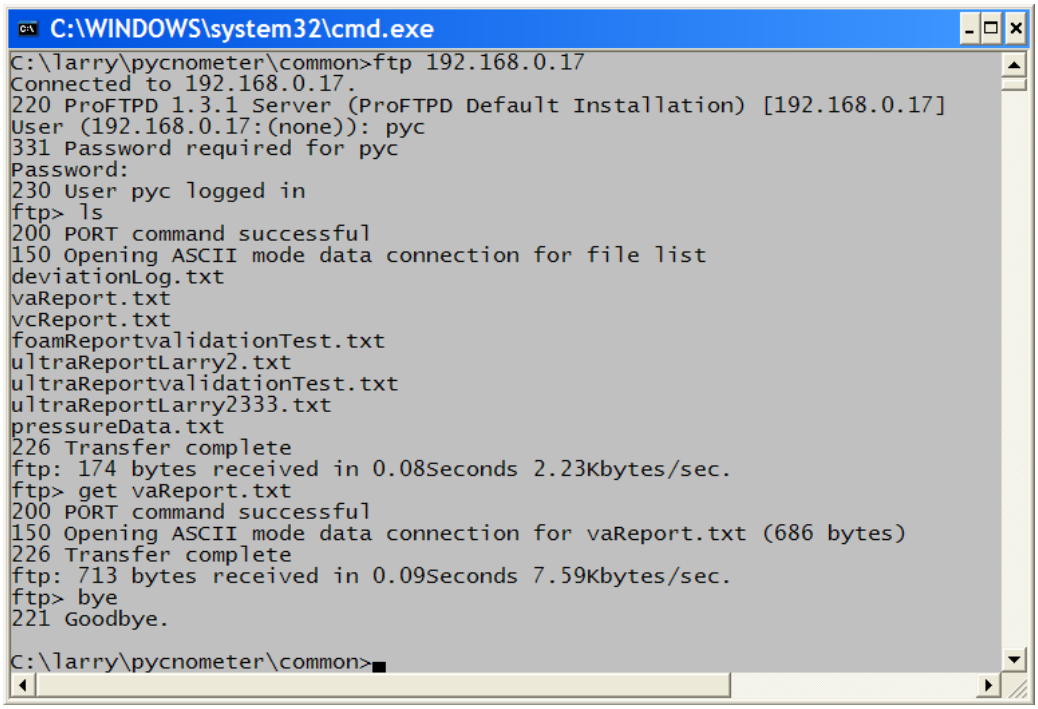

Figure J.8, Using The Command Shell To Get Data

8. End the FTP session with the FTP command "**bye**."

The exact same commands could be used from a UNIX or Linux workstation just open a shell terminal instead of the Windows cmd window.

File Transfer *via* FileZilla

An example session, used to download report files from the Ultrapyc to a Microsoft Windows computer, is described below.

Enter the IP address of the pycnometer into the Host box of FileZilla, enter the user name "**pyc**", the password is "**pyc**".

NOTE! If you do not know the pycnometer's IP address, you can display it by using the following sequence from the instrument's keypad: Main Menu → `3-System Settings` → `2-Network Configuration`→ `1-Display IP Address` (see also Section D.3.3.1 **Network Menu,** of this manual).

Click on the "Quick Connect" button to start the session. Looking at FileZilla, the user will notice that the window panes on the left side correspond to the file system of the computer, while the window panes on the right side of FileZilla correspond to the Ultrapyc file system. Use the mouse to drag and drop the Ultrapyc report files into the desired directory of the computer. The FTP session will timeout 5 minutes after the last operation. Reconnect if a timeout occurs. See the FileZilla documentation at **www.filezilla-project.org** for more details.

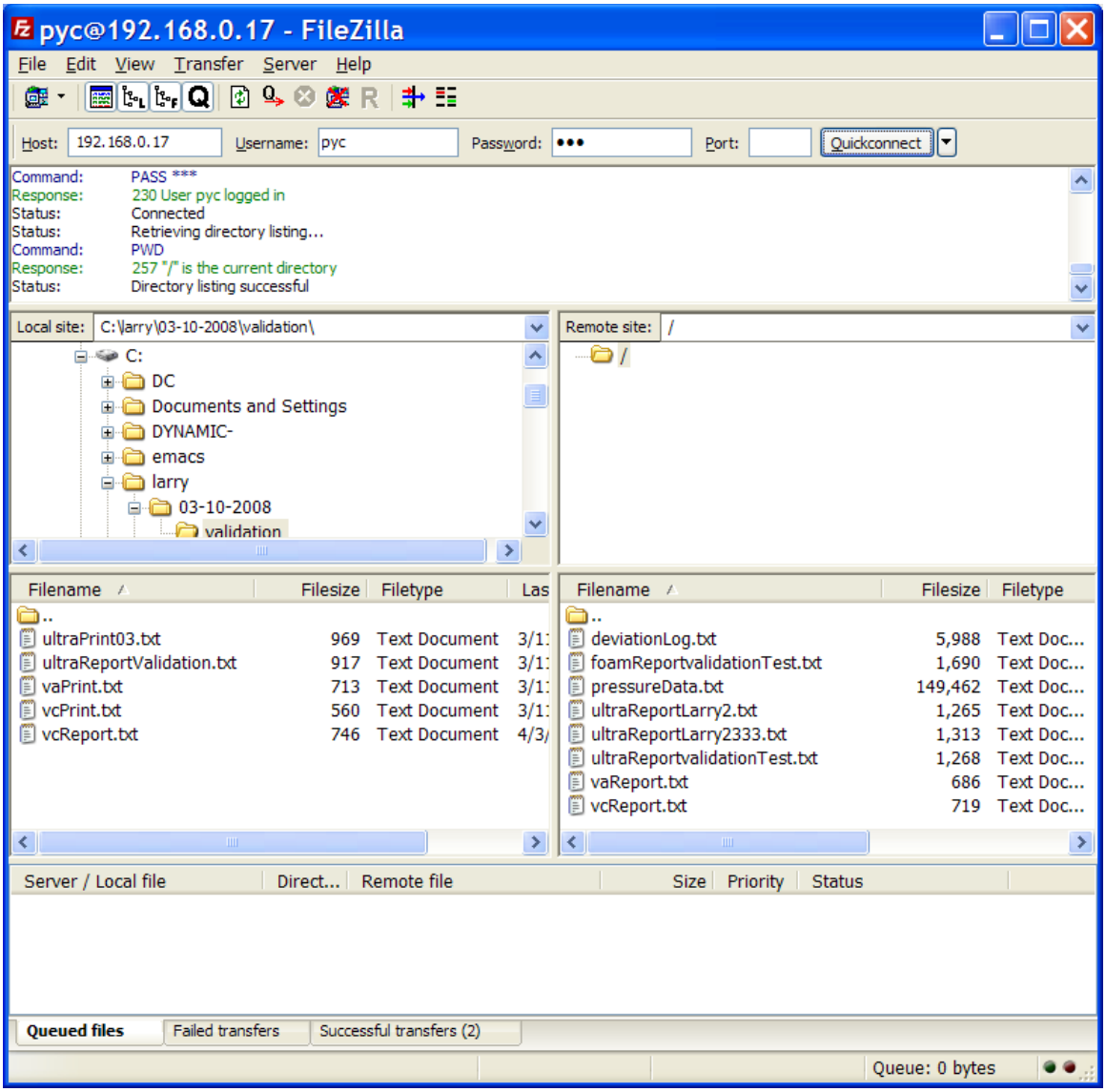

Figure J.9, FileZilla Screen

Appendix 7.2 Updating Pycnometer's Firmware

In case the pycnometer requires firmware update, please contact Quantachrome to obtain the ***pycUpdate.qcz*** update file. Save this file on a computer's hard drive and note the directory where the user saved the file. This update file name is the same for all firmware versions. Do not rename the update file (i.e. save it as ***pycUpdate.qcz***).

Similarly, as in case of described above report file transfers, the pycnometer's firmware can be updated via FTP command line or via FileZilla (i.e. FTP client with a graphical-user interface).

Firmware Update *via* Command Line FTP

In the example below, the **update file** is located in **c:\users**

NOTE! All commands below are listed in "quotation mark", when typing command characters, the quotation punctuations must be omitted. Example: for "**command**", type-in **command**. To execute a command, hit **ENTER** key (PC keyboard).

To upgrade the pycnometer's firmware, use the following procedure:

1. Facilitate a LAN connection (use Ethernet cable) between the pycnometer and the computer on which the ***pycUpdate.qcz*** update file was saved.
2. First, click on Windows 

button (located in the right bottom corner of the computer screen). Locate option 

and click on it.
3. The Run window will open. Here, type-in the following command: "**cmd**" and click **OK**:

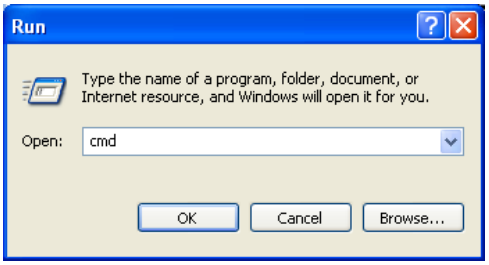

Figure J.10, Running Command Line Prompt

4. This will open the Windows command shell:

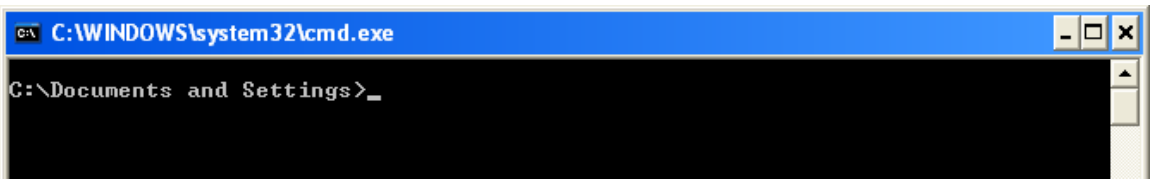

Figure J.11, Command Line Prompt

5. At the command prompt, change directory to the location of the update file ***pycUpdate.qcz***. Since in this example the **update file** was saved in **c:\users**; a command "**cd c:\users**" would be typed:

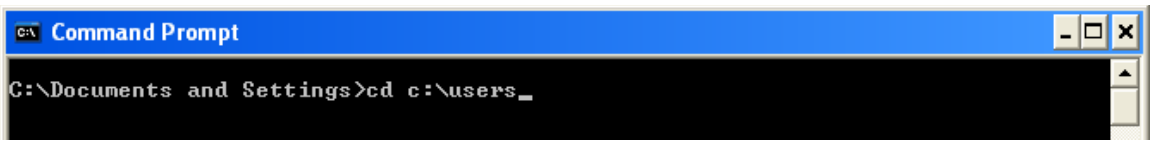

Figure J.12, Change Directory To "Users"

NOTE! Hit **ENTER** key to execute any command that is typed-in, and wait for response.

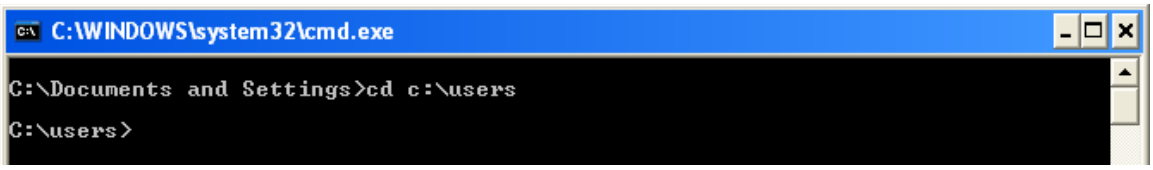

Figure J.13, Users Directory

6. After directory has been successfully changed, open the **ftp session**, by typing-in the following command: "**ftp xxx.xxx.xxx.xxx**", where "xxx.xxx.xxx.xxx" stands for the IP address of the pycnometer. Hit **ENTER** to execute the command.

NOTE! In the example below the IP address "**192.168.0.101**" was used. The user must use the actual IP address of the pycnometer to properly facilitate an **ftp** session.

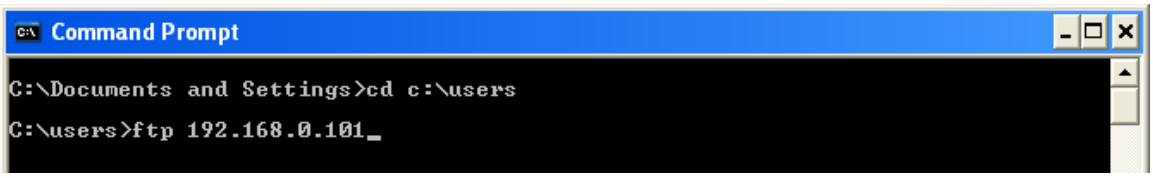

Figure J.14, Start ftp Program And Connect To Pyc

NOTE! If you do not know the pycnometer's IP address, you can display it by using the following sequence from the instrument's keypad: Main Menu → `3-System Settings` → `2-Network Configuration`→ `1-Display IP Address` (see also Section D.3.3.1 **Network Menu,** of this manual).

Allow a couple of minutes for the ftp session to establish. Wait for the following responses to be displayed:

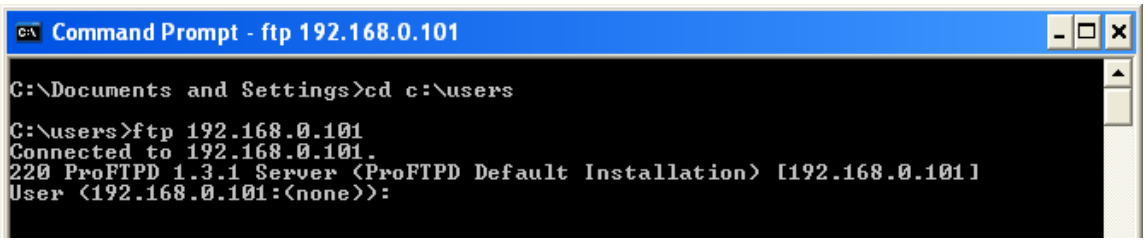

Figure J.15, FTP Prompt

7. After the ftp session is open, proceed with login. At the user prompt, type-in "**pyc**" (hit **ENTER** to execute). Similarly, at the password prompt, type "**pyc**" again (hit **ENTER** to execute). At this point, you should be successfully logged in the ftp session:

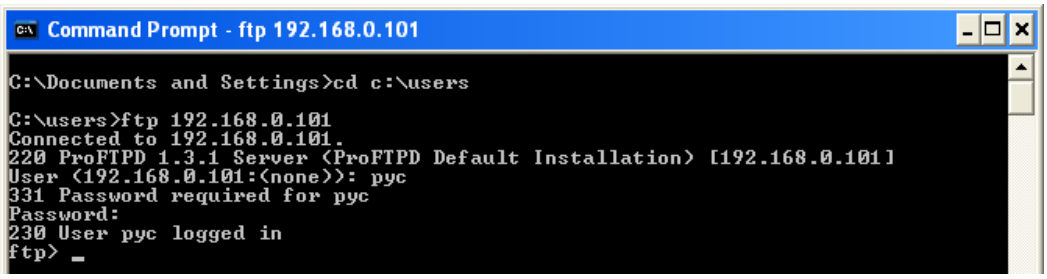

Figure J.16, Logging Into Ftp Server

8. Next, type-in the following ftp session commands, in the order as listed below. Hitting **ENTER** key, will execute each command and generate a corresponding response. Allow sufficient time lapse between each command, as processing duration may vary:
   - type-in command "**bi**" (wait for response "*200 Type set to I*")
   - type-in command "**put pycUpdate.qcz**" (wait for response "*200 PORT command successful*....."). Allow a couple of minutes for this command to be fully executed. Wait for the following window:

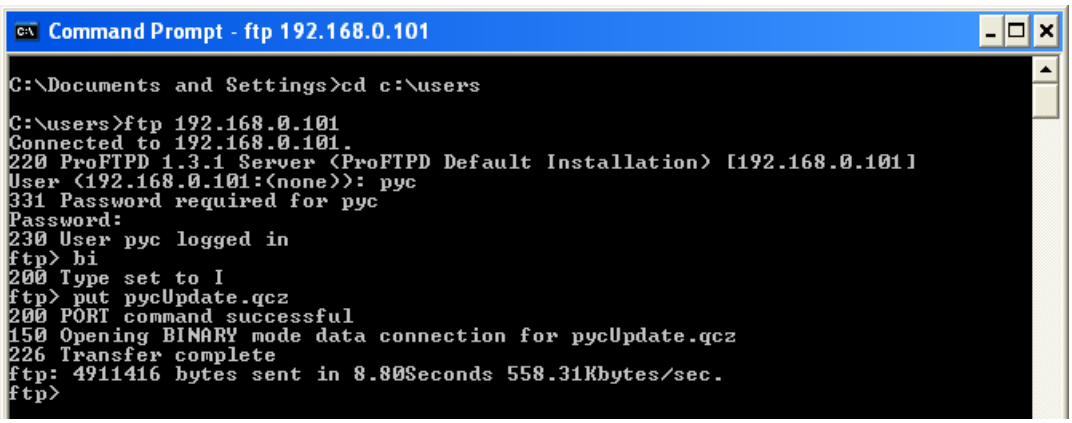

Figure J.17, Transfer Complete

   - type-in command "**bye**" (wait for response "goodbye"):

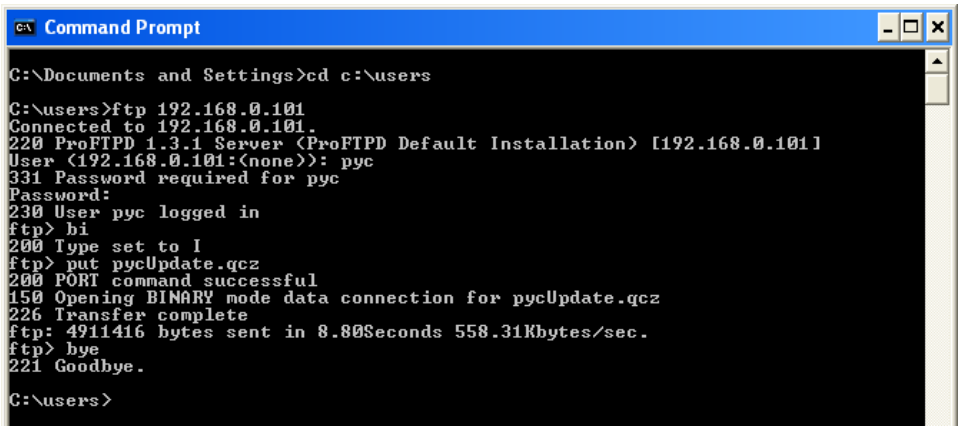

Figure J.18, Leaving ftp

9. At this point, the user can close the Windows command shell.

10. Next, reboot the pycnometer's operating system. Use the instrument's keypad to follow the sequence: Main Menu → `8-Shutdown`

After pycnometer shuts down, wait for ~5 seconds then cycle the power switch (OFF/ON).

NOTE! Alternatively, pycnometer can be rebooted by holding down (for ~5 seconds) the black **RESET** button.

11. While the pycnometer boots back up, the firmware update will take place and the following messages would be displayed on the screen:

"pyc Update Manager"

"Update file found"

"Installing update"

"Removing update file"

"Update complete".

12. Please allow several minutes for the reboot/update cycle to complete.
13. After update procedure has completed, the new firmware version would be displayed on the pycnometer's screen.

Firmware Update *via* FileZilla

The pycnometer can be updated by uploading the update file "pycUpdate.qcz". Using the logon instructions above, find where the "pycUpdate.qcz" is stored on the left side and drag that file to the directory on the right side. Once the file has been uploaded restart the pycnometer - the firmware update will run automatically.

Appendix 8 Leak Check

The Ultrapyc can perform an automated leak test. The automatic leak test can be selected using keypad sequence

Main menu → `3-System Settings` → `9-LeakCheck`.

The automatic leak test checks for leaks in the three sections of the Ultrapyc, the cell volume section, the small Vadded volume section, and large Vadded volume section. Stable pressure in the sections between valves is a good indication that the valves are sealing well. Pressure building or pressure falling is an indication of a leak. If the automatic leak check routine finds a leak, an error message is displayed on the LCD screen. If the routine runs to completion without detecting a leak, the message "Leak test finished, No leaks found" is displayed.

- Rising pressure in the cell chamber can be attributed to a leak across the gas input valve, increasing temperature, or vapor pressure from contamination in the cell chamber (e.g. sample spilled out of the sample cup during a previous run).
- Falling pressure in the cell chamber can be attributed to a leak at the O-ring on the cell cover or at the expansion valve.

The Following diagrams depict the valve states that the automatic leak check algorithm uses for checking for leaks in the three sections of the Ultrapyc. An operator could also place the instrument in "Manual Mode" open and close valves manually and perform the same leak checks as the automated method.

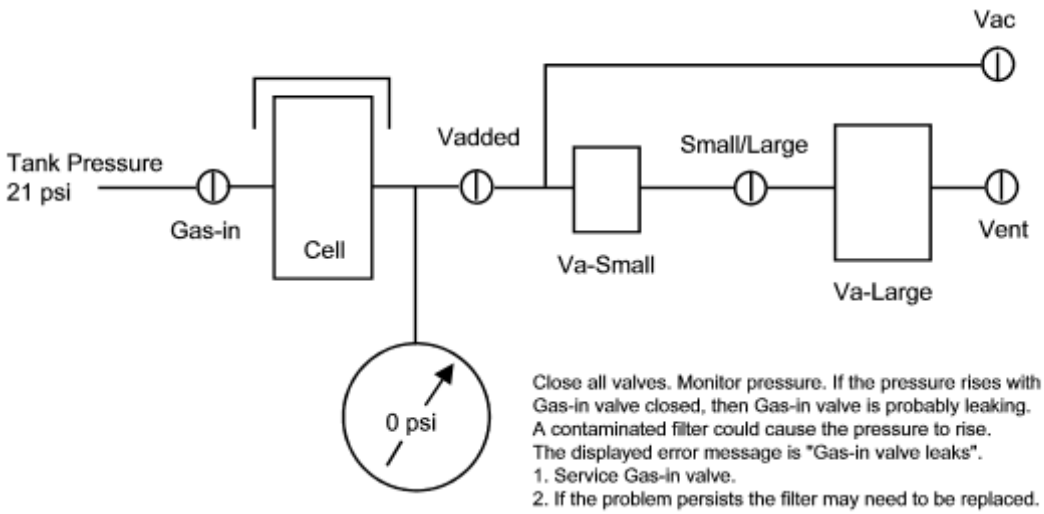

Close all valves. Monitor pressure. If the pressure rises with the Gas-in valve closed, then Gas-in valve is probably leaking.
A contaminated filter could cause the pressure to rise.
The displayed error message is "Gas-in valve leaks".
1. Service Gas-in valve.
2. If the problem persists the filter may need to be replaced.

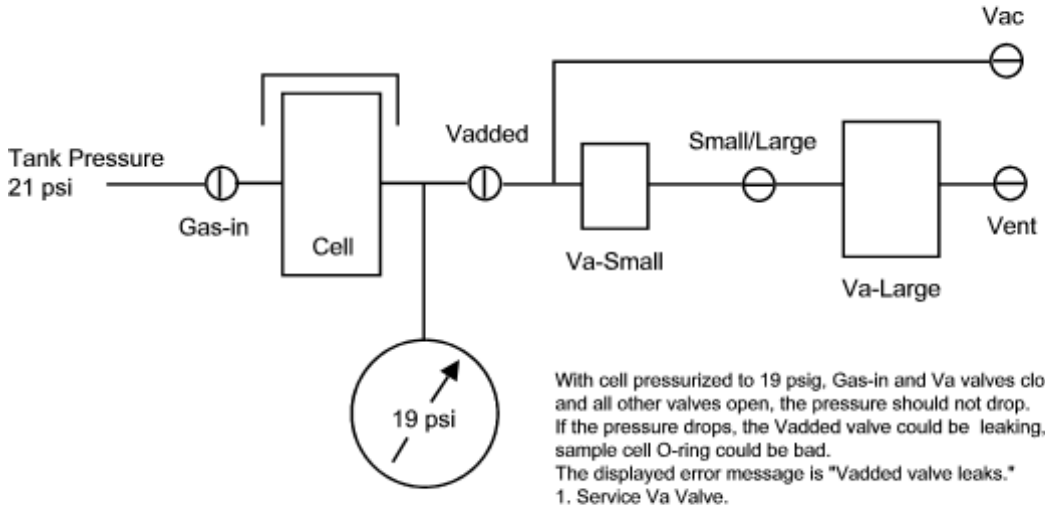

With cell pressurized to 19 psig, Gas-in and Va valves closed, and all other valves open, the pressure should not drop.
If the pressure drops, the Vadded valve could be leaking, or the sample cell O-ring could be bad.
The displayed error message is "Vadded valve leaks."
1. Service Va Valve.
2. Lubricate or replace the sample cell O-ring.

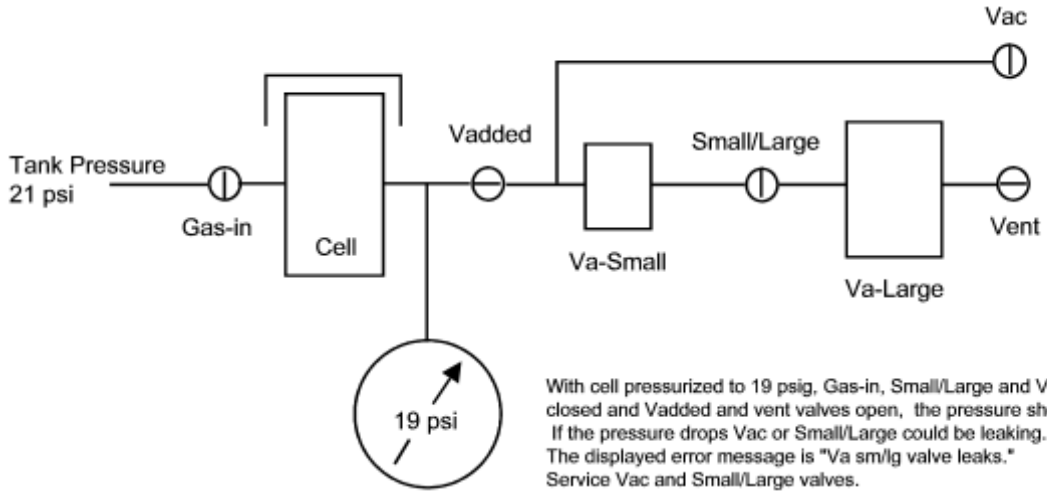

With cell pressurized to 19 psig, Gas-in, Small/Large and Vac valves closed and Vadded and vent valves open, the pressure should not dro
If the pressure drops Vac or Small/Large could be leaking.
The displayed error message is "Va sm/lg valve leaks."
Service Vac and Small/Large valves.

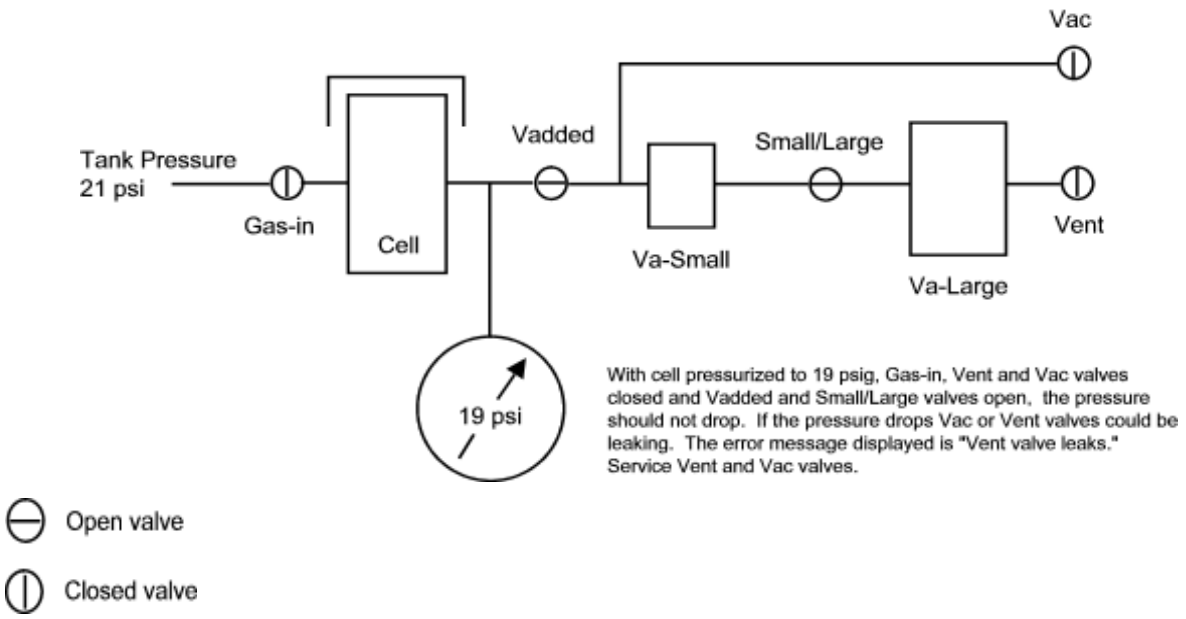

When the Ultrapyc pauses to display one of the error messages, or runs to completion and displays the “No leaks found” message, it waits for user input before returning to the “System Settings” menu. Press the **CLEAR** or **RESET** buttons when ready to continue.

Appendix 9 GPL / LGPL Source Code

The Quantachrome Pycnometer uses a Linux based operating system. Use of the Linux operating system and Linux utilities are licensed under the GNU General Public License (GPL.) The Pycnometer application code was compiled with the GNU GCC compiler tool chain and linked against the GNU GLIBC libraries. Use of the GNU GLIBC libraries is licensed under the GNU Lesser General Public License (LGPL.) No modifications were made to any GPL or LGPL source code used by the Quantachrome Pycnometer.

Under terms of the GPL and LGPL licenses Quantachrome is obligated to provide its customers with a copy of the GPL and LGPL source code used on the Pycnometer.

All GPL and LGP licensed software used on the Quantachrome Pycnometer are provided on the included CD (part number 36360).

Appendix 10 Foam Cutting Accessory

The UltraFoam instruments include a foam-cutting accessory, which facilitates cutting uniform cubes and cylinders of foam for analysis. This accessory is available separately from Quantachrome (SAP# 193287) as well. This accessory comes with illustrated instructions on its use. Please refer to these instructions before using this accessory.

Figure J.19, Foam Cutting Accessory

NOTE! Appearance may vary due to continuous improvement.

WARNING! The edge of the round cutter is sharp. Use caution to prevent injury.

WARNING! Keep fingers away from the knife blade when in operation.

Appendix 11 Pyc-Time Zones

PYC TIME ZONES

AFRICA

1	Abidjan	41	Mogadishu
2	Accra	42	Monrovia
3	Addis Ababa	43	Nairobi
4	Algiers	44	Ndjamena
5	Asmara	45	Niamey
6	Asmera	46	Nouakchott
7	Bamako	47	Ouagadougou
8	Bangui	48	Porto-Novo
9	Banjul	49	Sao Tome
10	Bissau	50	Timbuktu
11	Blantyre	51	Tripoli
12	Brazzaville	52	Tunis
13	Bujumbura	53	Windhoek
14	Cairo		
15	Casablanca		
16	Ceuta		
17	Conakry		
18	Dakar		
19	Dar es Salaam		
20	Djibouti		
21	Douala		
22	El Aaiun		
23	Freetown		
24	Gaborone		
25	Harare		
26	Johannesburg		
27	Kampala		
28	Khartoum		
29	Kigali		
30	Kinshasa		
31	Lagos		
32	Libreville		
33	Lome		
34	Luanda		
35	Lubumbashi		
36	Lusaka		
37	Malabo		
38	Maputo		
39	Maseru		
40	Mbabane		

AMERICA

54	Adak	94	Edmonton	134	Merida	174	St Kitts
55	Anchorage	95	Eirunepe	135	Mexico City	175	St Lucia
56	Anguilla	96	El Salvador	136	Miquelon	176	St Thomas
57	Antigua	97	Ensenada	137	Moncton	177	St Vincent
58	Araguaina	98	Fort Wayne	138	Monterrey	178	Swift Current
59	Argentina	99	Fortaleza	139	Montevideo	179	Tegucigalpa
60	Aruba	100	Glace Bay	140	Montreal	180	Thule
61	Asuncion	101	Godthab	141	Montserrat	181	Thunder Bay
62	Atikokan	102	Goose Bay	142	Nassau	182	Tijuana
63	Atka	103	Grand Turk	143	New York	183	Toronto
64	Bahia	104	Grenada	144	Nipigon	184	Tortola
65	Bahia Banderas	105	Guadeloupe	145	Nome	185	Vancouver
66	Barbados	106	Guatemala	146	Noronha	186	Virgin
67	Belem	107	Guayaquil	147	North Dakota	187	Whitehorse
68	Belize	108	Guyana	148	Ojinaga	188	Winnipeg
69	Blanc-Sablon	109	Halifax	149	Panama	189	Yakutat
70	Boa Vista	110	Havana	150	Pangnirtung	190	Yellowknife
71	Bogota	111	Hermosillo	151	Paramaribo		
72	Boise	112	Indiana	152	Phoenix		
73	Buenos Aires	113	Indianapolis	153	Port-au-Prince		
74	Cambridge Bay	114	Inuvik	154	Port of Spain		
75	Campo Grande	115	Iqaluit	155	Porto Acre		
76	Cancun	116	Jamaica	156	Porto Velho		
77	Caracas	117	Jujuy	157	Puerto Rico		
78	Catamarca	118	Juneau	158	Rainy River		
79	Cayenne	119	Kentucky	159	Rankin Inlet		
80	Cayman	120	Knox IN	160	Recife		
81	Chicago	121	La Paz	161	Regina		
82	Chihuahua	122	Lima	162	Resolute		
83	Coral Harbour	123	Los Angeles	163	Rio Branco		
84	Cordoba	124	Louisville	164	Rosario		
85	Costa Rica	125	Maceio	165	Santa Isabel		
86	Cuiaba	126	Managua	166	Santarem		
87	Curacao	127	Manaus	167	Santiago		
88	Danmarkshavn	128	Marigot	168	Santo Domingo		
89	Dawson	129	Martinique	169	Sao Paulo		
90	Dawson Creek	130	Matamoros	170	Scoresbysund		
91	Denver	131	Mazatlan	171	Shiprock		
92	Detroit	132	Mendoza	172	St Barthelemy		
93	Dominica	133	Menominee	173	St Johns		

Appendix 11.1 Pyc-Time Zones-Continued

PYC TIME ZONES

AMERICA/ARGENTINA

191	Buenos Aires
192	Catamarca
193	ComodRivadavia
194	Cordoba
195	Jujuy
196	La Rioja
197	Mendoza
198	Rio Gallegos
199	Salta
200	San Juan
201	San Luis
202	Tucuman
203	Ushuaia

AMERICA/INDIANA

204	Indianapolis
205	Knox
206	Marengo
207	Petersburg
208	Tell City
209	Vevay
210	Vincennes
211	Winamac

AMERICA/KENTUCKY

212	Louisville
213	Monticello

AMERICA/NORTH DAKOTA

214	Center
215	New Salem

ANTARTICA

216	Casey
217	Davis
218	DumontDUrville
219	Macquarie
220	Mawson
221	McMurdo
222	Palmer
223	Rothera
224	South Pole
225	Syowa
226	Vostok

ARTIC

227	Longyearbyen

ASIA

228	Aden
229	Almaty
230	Amman
231	Anadyr
232	Aqtau
233	Aqtobe
234	Ashgabat
235	Ashkhabad
236	Baghdad
237	Bahrain
238	Baku
239	Bangkok
240	Beirut
241	Bishkek
242	Brunei
243	Calcutta
244	Choibalsan
245	Chongqing
246	Chungking
247	Colombo
248	Dacca
249	Damascus
250	Dhaka
251	Dili

ASIA - CONTINUED

252	Dubai
253	Dushanbe
254	Gaza
255	Harbin
256	Ho Chi Minh
257	Hong Kong
258	Hovd
259	Irkutsk
260	Istanbul
261	Jakarta
262	Jayapura
263	Jerusalem
264	Kabul
265	Kamchatka
266	Karachi
267	Kashgar
268	Kathmandu
269	Katmandu
270	Kolkata
271	Krasnoyarsk
272	Kuala Lumpur
273	Kuching
274	Kuwait
275	Macao
276	Macau
277	Magadan
278	Makassar
279	Manila
280	Muscat
281	Nicosia
282	Novokuznetsk
283	Novosibirsk
284	Omsk
285	Oral
286	Phnom Penh
287	Pontianak
288	Pyongyang
289	Qatar
290	Qyzylorda
291	Rangoon
292	Riyadh
293	Riyadh87
294	Riyadh88
295	Riyadh89
296	Saigon
297	Sakhalin
298	Samarkand
299	Seoul
300	Shanghai
301	Singapore
302	Taipei
303	Tashkent
304	Tbilisi
305	Tehran
306	Tel Aviv
307	Thimbu
308	Thimphu
309	Tokyo
310	Ujung Pandang
311	Ulaanbaatar
312	Ulan Bator
313	Urumqi
314	Vientiane
315	Vladivostok
316	Yakutsk
317	Yekaterinburg
318	Yerevan

Appendix 11.2 Pyc-Time Zones-Continued

PYC TIME ZONES

ATLANTIC

319	Azores
320	Bermuda
321	Canary
322	Cape Verde
323	Faeroe
324	Faroe
325	Jan Mayen
326	Madeira
327	Reykjavik
328	South Georgia
329	St Helena
330	Stanley

AUSTRALIA

331	ACT
332	Adelaide
333	Brisbane
334	Broken Hill
335	Canberra
336	Currie
337	Darwin
338	Eucla
339	Hobart
340	LHI
341	Lindeman
342	Lord Howe
343	Melbourne
344	NSW
345	North
346	Perth
347	Queensland
348	South
349	Sydney
350	Tasmania
351	Victoria
352	West
353	Yancowinna

BRAZIL

354	Acre
355	DeNoronha
356	East
357	West

CANADA

358	Atlantic
359	Central
360	East-Saskatchewan
361	Eastern
362	Mountain
363	Newfoundland
364	Pacific
365	Saskatchewan
366	Yukon

CHILE

367	Continental
368	EasterIsland

ETC

369	GMT
370	GMT+0
371	GMT+1
372	GMT+10
373	GMT+11
374	GMT+12
375	GMT+2
376	GMT+3
377	GMT+4
378	GMT+5
379	GMT+6
380	GMT+7
381	GMT+8
382	GMT+9
383	GMT-0
384	GMT-1
385	GMT-10
386	GMT-11
387	GMT-12

ETC - CONTINUED

388	GMT-13
389	GMT-14
390	GMT-2
391	GMT-3
392	GMT-4
393	GMT-5
394	GMT-6
395	GMT-7
396	GMT-8
397	GMT-9
398	GMT0
399	Greenwich
400	UCT
401	UTC
402	Universal
403	Zulu

EUROPE

404	Amsterdam
405	Andorra
406	Athens
407	Belfast
408	Belgrade
409	Berlin
410	Bratislava
411	Brussels
412	Bucharest
413	Budapest
414	Chisinau
415	Copenhagen
416	Dublin
417	Gibraltar
418	Guernsey
419	Helsinki
420	Isle of Man
421	Istanbul
422	Jersey
423	Kaliningrad
424	Kiev
425	Lisbon

EUROPE - CONTINUED

426	Ljubljana
427	London
428	Luxembourg
429	Madrid
430	Malta
431	Mariehamn
432	Minsk
433	Monaco
434	Moscow
435	Nicosia
436	Oslo
437	Paris
438	Podgorica
439	Prague
440	Riga
441	Rome
442	Samara
443	San Marino
444	Sarajevo
445	Simferopol
446	Skopje
447	Sofia
448	Stockholm
449	Tallinn
450	Tirane
451	Tiraspol
452	Uzhgorod
453	Vaduz
454	Vatican
455	Vienna
456	Vilnius
457	Volgograd
458	Warsaw
459	Zagreb
460	Zaporozhye
461	Zurich

Appendix 11.3 Pyc-Time Zones-Continued

PYC TIME ZONES

INDIAN

462	Antananarivo
463	Chagos
464	Christmas
465	Cocos
466	Comoro
467	Kerguelen
468	Mahe
469	Maldives
470	Mauritius
471	Mayotte
472	Reunion

MEXICO

473	BajaNorte
474	BajaSur
475	General

MIDEAST

476	Riyadh87
477	Riyadh88
478	Riyadh89

PACIFIC

479	Apia
480	Auckland
481	Chatham
482	Chuuk
483	Easter
484	Efate
485	Enderbury
486	Fakaofo
487	Fiji
488	Funafuti
489	Galapagos
490	Gambier
491	Guadalcanal
492	Guam
493	Honolulu
494	Johnston
495	Kiritimati

PACIFIC-CONTINUED

496	Kosrae
497	Kwajalein
498	Majuro
499	Marquesas
500	Midway
501	Nauru
502	Niue
503	Norfolk
504	Noumea
505	Pago Pago
506	Palau
507	Pitcairn
508	Pohnpei
509	Ponape
510	Port Moresby
511	Rarotonga
512	Saipan
513	Samoa
514	Tahiti
515	Tarawa
516	Tongatapu
517	Truk
518	Wake
519	Wallis
520	Yap

US

521	Alaska
522	Aleutian
523	Arizona
524	Central
525	East-Indiana
526	Eastern
527	Hawaii
528	Indiana-Starke
529	Michigan
530	Mountain
531	Pacific
532	Pacific-New
533	Samoa

Appendix 12 Preventative Maintenance Plan

In order to keep your instrument running at a high standard consistently it is advised that a maintenance plan is established using the following guidelines recommended by Quantachrome Instruments. The service kit listed will provide the needed parts for a maintenance routine such as new filters and o-rings. When needed, the Quantachrome Instruments Service Department can install the instrument service kit for you. For any questions or concerns regarding the maintenance plan, please contact the Quantachrome Instruments Service Department.
The recommended protocol for instrument maintenance can be broken into a plan involving frequent (monthly) and in-frequent (every five years) components. The following chart details the suggested schedule for your instrument's maintenance and includes the items that may be necessary when organizing a maintenance procedure for your instrument.

Table J.3, Preventative Maintenance Plan

Maintenance Item	Recommended Frequency	Performed by	Name of Part Needed	Part Number
Install Service Kit	Every Year	Service Technician	Pentapyc Service Kit	33011-PPYC
Replace All Spider Discs	Every Three Years	Service Technician	Spider disc	50042-4
Replace the Pressure Relief Valve	Every Five Years	Service Technician	Pressure Relief Valve	50021
Replace All Valves	Every Five Years	Service Technician	Valve	50050